RUSSIAN MARITIME REGISTER OF SHIPPING

Version: 01.03.2023

COLLECTION

OF THE RULES FOR CONTAINERS

ND No. 2-090201-014-E

St. Petersburg
2023

COLLECTION OF THE RULES FOR CONTAINERS

This Collection consists of the General Regulations for the Technical Supervision of Containers, the Rules for the Manufacture of Containers, the Rules for the Approval of Containers for the Transport of Goods under Customs Seal, the Rules for Technical Supervision during Manufacture of Containers, Materials and Products for Containers and the Rules for Technical Supervision of Containers in Service.

The Rules have been approved in compliance with the established approval procedure, they shall come into force on 15 February 2023 and apply to containers of 10 t gross mass and above intended for the carriage of goods by water, rail and road as well as to offshore containers (handled in open seas) of other gross mass.

The present edition is based on 2021 edition, taking into account additions and amendments developed immediately before publication.

The Rules have taken into account the requirements of the acting International Convention for Safe Containers (CSC), 1972, as amended, Customs Convention on Containers (CCC), as amended in 2008, International Maritime Dangerous Goods Code (IMDG Code), as amended, acting Regulations for transporting dangerous goods by air, sea, road and rail transport, IACS Unified Requirements (UR), ISO standards, European Standards, IMO resolutions and UN Recommendations on the Transport of Dangerous Goods as well as national standards and rules.

In case of discrepancies between the Russian and English versions, the Russian version shall prevail.

© Russian Maritime Register of Shipping, 2023

REVISION HISTORY[1]
(purely editorial amendments are not included in the Revision History)

Amended paras/chapters/ sections	Information on amendments	Number and date of the Circular Letter	Entry-into-force date
General Regulations for the Technical Supervision of Containers, Table 2.1.3	Groups of technical supervision have been specified; requirements for approval of materials and documents to be issued have been specified	382-02-1890c of 07.02.2023	01.03.2023

[1] Amendments and additions introduced at re-publication or by new versions based on circular letters or editorial amendments.

GENERAL REGULATIONS FOR THE TECHNICAL SUPERVISION OF CONTAINERS

1 GENERAL

1.1 DEFINITIONS, ABBREVIATIONS AND EXPLANATIONS

1.1.1 Definitions.

Additional requirements are the requirements caused by the item features or its operational conditions, which are not provided for by the rules imposed by RS in writing to ensure the safety of items of technical supervision.

Applicant is an organization (firm) which applies to RS with a request to perform technical supervision. The Applicant can be a manufacturer, a designer, and/or other organization acting on behalf of the manufacturer or designer.

Approval of a material, product or process is confirmation by branding and/or the RS document of a material, product or process compliance with the RS requirements based on the positive results of their survey.

Approval (agreement) of technical documentation is confirmation by the RS stamp and/or document of compliance of technical documentation with the RS requirements based on the positive results of its review.

Bearing structural elements mean a set of structural components that receive static and dynamic loads during testing and operation of containers.

Certificate is a RS document certifying the compliance of an item of supervision with the RS requirements.

Container owner is a legal entity or a physical person being the owner or leasee of containers.

Container structure means an arrangement of container parts including the following:

bearing structure means elements of the frame and panel of the container perceiving loads. The bearing structure includes:

main bearing structure means the main structural elements of the container that transfer the load created by the cargo on the elements of lifting equipment that lifts the container. The main bearing structure includes, as a minimum, the following elements: top and bottom side rails, top and bottom end rails, corner posts, offshore containers pad eyes, fork lift pockets, corner and intermediate fittings as well as vessels of tank containers.

Note. Other elements of the bearing structure can also be attributed by RS to the main bearing structure; and

secondary bearing structure means other structural elements which do not fall under the definition of main bearing structure. Secondary bearing structure includes, as a minimum, the following elements: floor plates, intermediate bottom rails, components for vessel fastening to the frame, protective frame members, etc.

Notes: 1. Side panels, end panels, roof panel and doors are secondary bearing structure for general freight containers, open top containers, non-pressurized solid bulk containers, thermal containers, and containers capable of being folded.

2. Side and end panels, roof panel and doors may be secondary structure for named cargo containers, depending on the design;

as well as secondary structure which means container parts, which do not transfer the load to the elements of lifting equipment. The secondary structure includes: panel stiffeners,

roof panels, structural components used for protection of tank container vessels and cargo securing arrangements, reinforcement compartments, handrails, ladders, platforms, etc.

Note. Side panels, end panels, roof panel and doors are secondary structure for platform containers, platform-based containers, tank containers of all types, as well as offshore containers of all types.

Contract on technical supervision is an agreement in the written form defining rights and responsibilities of the Register and organization (firm) during technical supervision of the items of supervision.

Corner fittings mean the structural elements with apertures and faces, arranged at the top and bottom corners of a container for the purposes of handling, stacking and/or securing.

Freight container means transport equipment:

of a permanent character and accordingly strong enough to be suitable for repeated use;

specially designed to facilitate the transportation of goods by one or more modes of transport without intermediate reloading;

designed to be secured and/or readily handled, and having corner fitting for these purposes;

of a size such that the area enclosed by the four outer bottom corners is at least 14 m^2, or at least 7 m^2 if it is fitted with top corner fittings.

Safety in this particular case means safety of life at sea, safe carriage of goods and equipment.

ISO container means a freight container complying with all relevant ISO container standards in existence at the time of its manufacture.

Notes: 1. Definitions of container types, as well as other terms in relation to containers are given in ISO 830.

2. ISO series 1 container is an ISO container complying with ISO 668.

3. The term "container" includes neither vehicles, nor packaging; however, containers when carried on chassis are included.

Items of technical supervision (items of supervision) are containers, products, materials, works, services and processes within the RS terms of reference in compliance with the current legislation and the Charter.

Manufacturer is an organization (firm) that:

manufactures containers, materials or products, or

performs part of operations (carries out part production) that determine the quality of the material or product, or

carries out the final assembly of the product.

The manufacturer is responsible for the container, material or product compliance with the applicable RS requirements and approved documentation.

Materials mean metal, welding, sealing materials, plastics, wood, clothes as well as plywood covered by the requirements of the Rules for the Manufacture of Containers.

Maximum operating gross mass, R, means the maximum allowable combined mass of the container and its cargo.

Maximum permissible payload, P, means the difference between maximum gross mass R and tare mass T.

Note. In case when during testing gravitational forces are used, the inertial forces of the above values are denoted respectively by: R_g, T_g and P_g. For the purpose of these Rules g = 9,81 m/s^2.

Normative documents are standards, regulations, technical requirements, norms, calculation procedures, instructions, guidelines and other documents, which provide design, technical or production requirements for design, construction (manufacture), installation, testing and service of the items of the RS technical supervision.

Offshore container (handed in open seas) means transport equipment having sufficient strength, designed for use in the transportation of goods or equipment, capable of being handled in open seas, to, from, and between fixed or floating facilities and ships.

Note. Not intended for permanent installation on ships and mobile offshore drilling units/fixed offshore platforms.

Organization (firm) is a legal entity of any legal form, form of ownership and affiliation, as well as a physical person involved in business not being a legal person involved in activity related to the items of supervision.

Pilot specimen (pilot lot) is a container, a material or a product (lot) produced in accordance with newly developed technical documentation to determine a possibility of its use for the intended purpose in compliance with the RS requirements, based on review of technical documentation and checking in the course of tests or research of structural solutions as well as combination of properties and parameters.

Product means an item of machinery, an appliance, a pressure vessel, an apparatus, a device, an item of equipment or outfit to which the requirements of the Rules are applicable.

Prototype (first lot) is a container, material or product (lot) used by the Register to check and confirm by means of tests and surveys that it complies with the RS requirements and may be used for the intended purpose if produced at the firm (manufacturer) concerned.

Recognition of a manufacturer is confirmation by the RS document of capability of a manufacturer to manufacture containers or materials and/or products in compliance with the RS requirements.

Recognition of a testing laboratory is confirmation by the RS document of technical competence of a testing laboratory in conducting tests in compliance with the RS requirements.

Recognition of an organization (firm) is confirmation by the RS document of capability of an organization (firm) to render services (carry out work) in compliance with the RS requirements.

Requirements of conventions are requirements of international conventions ratified by the governments, which have authorized the Register to supervise the fulfillment of those requirements.

Review of technical documentation is determination of an extent of documentation compliance with the RS requirements.

RS Branch Office is a branch office, a district office of the branch office, a representative office, an affiliated company. Regulations for the RS Branch Office determine its legal status, tasks and functions within the certain processes, duties, rights and responsibility of the Director as well as the area of the RS Branch Office activity.

RS Head Office is the management of the Register and departments of the Head Office.

RS requirements are requirements of the RS rules, international conventions and agreements, recommendations of the International Maritime Organization (IMO), governments having granted RS the relevant authorization, and additional requirements.

RS rules are a code of normative technical requirements for items of technical supervision (listed in 1.3).

Note. Hereinafter referred to as the "Rules".

S u r v e y is an integral part of technical supervision, including:

checking availability of approved technical documentation on the items of technical supervision and/or;

checking availability of the RS documents, recognized and competent organizations or persons on the items of technical supervision and/or;

examinations, including (where necessary) opening-up and dismantling and/or;

technical supervision during measurements, tests and/or;

assessment of the measurement and test results and/or;

drawing-up, endorsement, renewal and extension of the RS documents and/or; checking of marking and/or;

branding (where necessary) of the item of technical supervision.

S u r v e y o r is an RS official authorized to carry out (perform) certain types of the RS technical supervision.

S w a p b o d y means transport equipment having sufficient strength, designed, normally, for rail and road vehicle transportation by land or by water, having unified dimensions, unified means of securing and handling, and a width and/or a length exceeding those of ISO series 1 containers.

T a r e m a s s , T, means the mass of the empty container including permanently affixed ancillary equipment.

T e c h n i c a l d o c u m e n t a t i o n is construction and production documentation as well as the normative documents on items of technical supervision, which contain the data necessary for checking the fulfillment of the RS requirements.

T e c h n i c a l s u p e r v i s i o n is checking of conformity of items of supervision with the RS requirements during:

review and approval (agreement) of technical documentation;

survey of items of supervision at construction, service stages, including conversion, modernization and repair.

T e s t is a technical operation on determination of one or more characteristics or operating parameters of an item of supervision in compliance with the established or defined procedure.

T y p e o f c o n t a i n e r means the design type of container complying with requirements of these Rules and approved by the Register.

T y p e - s e r i e s c o n t a i n e r means any container manufactured in accordance with the approved design type.

1.1.2 Abbreviations.

RHO – RS Head Office.

ADR – European Agreement Concerning the International Carriage of Dangerous Goods by Road.

CSC – Convention for Safe Containers.

CCC – Customs Convention on Containers.

IACS – International Association of Classification Societies.

IMDG Code – International Maritime Dangerous Goods Code.

RID – International Regulations for the Carriage of Dangerous Goods by Rail.

Register, RS – Russian Maritime Register of Shipping.

C – Certificate filled-in and signed by the Register (forms 6.5.23, 6.5.28, 6.5.29, 6.5.30, 6.5.34, 6.5.36).

C3 – Certificate (form 6.5.31) filled-in and signed by an official of a firm (manufacturer) and drawn up (endorsed) by the Register on the basis of the review of the product/equipment test results performed by the manufacturer and only upon signing of C3 on behalf of the manufacturer.

СДС – Welder Approval Test Certificate (form 7.1.30).

SMGS – Agreement on International Carriage of Goods by Rail.

СОД – Certificate of Freight Container Safety Approval by Design Type (form 2.3.1); Design Type Approval Certificate of the Portable Tank (Tank Container) for Transportation of Dangerous Goods (form 2.3.4); Certificate of Container Approval at a Stage Container Subsequent to Manufacture (form 2.4.1); Certificate of Container Approval by Design Type (form 2.4.2); Type Design Approval Certificate for Offshore Container (form 2.3.5); Type Design Approval Certificate for Thermal Container (form 2.3.2).

СОСМ – Certificate of Approval for Welding Consumables (form 6.5.33).

СОТПС – Welding Procedure Approval Test Certificate (form 7.1.33).

СП – Recognition Certificate (form 7.1.4.2).

СПИ – Recognition Certificate for Manufacturer (form 7.1.4.1).

СПЛ – Recognition Certificate of Testing Laboratory (form 7.1.4.3).

СПО – Recognition Certificate for the Firm Performing Freight Container Inspection (form 7.1.4.5)

ССП – Certificate of Firm Conformity (form 7.1.27).

СТО – Type Approval Certificate (form 6.8.3).

IMO – International Maritime Organization.

ISO – International Organization for Standardization.

MT — magnetic particle testing

P — maximum possible payload, in kg.

PT — penetrant testing, including dye penetrant testing, fluorescent penetrant testing and fluorescent-dye penetrant testing.

R — maximum gross mass, in kg.

RT — radiographic testing, including X-ray testing and gamma-ray testing.

T — tare mass, in kg.

UT — ultrasonic testing.

VT — visual testing.

1.1.3 Explanations.

The types of containers are given in ISO 830 standard.

The codes of dimensions and type are given in ISO 6346 standard.

1.2 THE REGISTER ACTIVITY ON TECHNICAL SUPERVISION

1.2.1 The Register is a body of technical supervision of containers. Being a member of the International Association of Classification Societies (IACS), the Register follows IACS decisions being guided by the provisions of the Code of Ethics of the Register. The Register Quality Management System (RS QMS) complies with applicable requirements of ISO 9001 and ISO/IEC 17020 standards, IACS QSCS and Regulation (EC) 391/2009, IMO resolution MSC.349(92), which is confirmed by the appropriate certificates.

1.2.2 The Register is authorized to exercise on behalf of the Government technical supervision of implementation of the provisions of international Conventions, agreements and contracts to which the Russian Federation or any other State, the Government of which has authorized the Register to conduct this kind of activities is a party, insofar as matters within the Register scope are concerned.

1.2.3 The Register establishes technical requirements for containers guided by these Rules (specified in 1.3), as well as valid provisions of the Convention for Safe Containers (CSC), Customs Convention on Containers (CCC), International Maritime Dangerous Goods Code (IMDG Code) and performs technical supervision of the compliance with these requirements.

It considers the applicability of other Regulations, Conventions and Agreements, European Agreement Concerning the International Carriage of Dangerous Goods by Road (ADR), International Regulations for the Carriage of Dangerous Goods by Rail (RID) and Rules for the Transport of Dangerous Goods, Appendix 2 to the Agreement on International Carriage of Goods by Rail (SMGS).

1.2.4 Technical supervision is performed according to the Rules issued by the Register, and is aimed at determining whether the containers subject to technical supervision of the Register, as well as the materials and products, meet the provisions of the Rules and the additional requirements.

The requirements of the Rules and additional requirements are obligatory for design organizations, firms (manufacturers) of containers, container owners, firms manufacturing materials and equipment for containers and those engaged in the repair and maintenance of containers subject to technical supervision of the Register.

Technical supervision of the Register does not supersede the quality control services of the container owners and firms (manufacturers).

1.2.5 The Register performs technical supervision of the containers and associated materials and products during design, manufacture and service.

1.2.6 The Register reviews and approves Russian normative documents, as well as those of other countries and international normative documents, containing norms and requirements for items of the RS technical supervision.

When normative documents of another country are submitted as part of technical documentation for the items of the RS technical supervision, they are considered its integral part, and their application in each case is confirmed by the approval of technical documentation without separate approval of said normative documents.

1.2.7 The Register may participate in investigations of matters lying within its scope.

1.2.8 The fees for the performed work are charged by the Register according to the Register scale of fees. Additional fees are charged by the Register in the case of additional expenses incurred in the course of rendering of service (for instance, traveling expenses, services rendered out of hours etc.).

1.3 RULES

1.3.1 Applicable Rules.

1.3.1.1 The Rules used by the Register in technical supervision of containers under manufacture and in service are:

.1 General Regulations for the Technical Supervision of Containers;

.2 Rules for the Manufacture of Containers, consisting of the following parts:

I "Basic Requirements";
II "General Freight Containers";
III "Thermal Containers";
IV "Tank Containers";
V "Platform containers and platform-based containers";
VI "Non-Pressurized Bulk Containers";
VII "Offshore containers";
VIII "Tank Containers with Fiber-Reinforced Plastics (FRP) Shell";

.3 Rules for the Approval of Containers for the Transport of Goods under Customs Seal;

.4 Rules for Technical Supervision during Manufacture of Containers, Materials and Products for Containers;

.5 Rules for Technical Supervision of Containers in Service;

.6 Rules for the Classification and Construction of Ships Carrying Liquefied Gases in Bulk, as applicable to containers;

.7 Rules for the Classification and Construction of Sea-Going Ships as applicable to containers;

.8 Rules for Technical Supervision during Construction of Ships and Manufacture of Materials and Products for Ships as applicable to containers.

1.3.1.2 In addition to the Rules stated in 1.3.1.1, other RS-developed normative documents applicable to containers are used by the Register in performing technical supervision.

1.3.2 Application of the Rules to containers under manufacture and to products.

1.3.2.1 Newly published Rules, as well as amendments introduced into the Rules, come into force from the date specified in the annotation to the publication, unless other terms are fixed in particular cases. Until the date of entry into force, they shall be considered as recommendation.

1.3.2.2 Interpretation of the requirements of the Rules and other normative documents of the Register is within the Register competence only.

1.3.2.3 The containers and products whose designs are submitted for approval of the Register after the entry into force of the Rules, or amendments introduced into the Rules, shall comply with the requirements of these Rules and amendments.

To the containers being manufactured and products whose technical documentation was approved by the Register prior to the entry into force of the Rules, those Rules are applicable which were in force on the date of approving that documentation.

1.3.3 Deviations from the Rules.

1.3.3.1 The Register may allow to use materials, structures or separate devices and items of the container, other than those specified in the Rules, provided they are at least as effective as those required by the Rules; deviations from the Rules, which are covered by the international conventions and agreements, may be permitted by the Register only if the latter is satisfied that such deviations are permissible under these conventions and agreements. In these cases, the Register shall be provided with information enabling to ascertain that the materials, structures and products meet the requirements which ensure trouble-free handling of the container and safe carriage of goods.

1.3.3.2 If the design of the container, its separate machinery, devices, units, equipment and outfit or the materials used cannot be regarded as sufficiently proved in service, the Register may require additional tests to be performed during manufacture of the container and, as applied to containers in service, may reduce the intervals between periodical surveys or increase the extent of such surveys.

1.4 DOCUMENTS

1.4.1 In the course of technical supervision the Register issues the appropriate documents.

1.4.2 Based on the results of technical supervision of containers, the following documents provided for by the List of Forms of the Register documents are issued during technical supervision:

.1 СОД:

.1.1 Certificate of Freight Container Safety Approval by Design Type which certifies the compliance of the freight container design type with the requirements of CSC and the Rules;

.1.2 Design Type Approval Certificate of the Portable Tank (Tank Container) for Transportation of Dangerous Goods which certifies the compliance of the tank container design type with the requirements of IMDG Code and the Rules and with indication of other applicable normative documents;

.1.3 Certificate of Container Approval at a Stage Container Subsequent to Manufacture which certifies the compliance of the container design type with the requirements of CCC and the Rules;

.1.4 Certificate of Container Approval by Design Type which certifies the compliance of the container design type with the requirements of CCC and the Rules;

.1.5 Type Approval Certificate for Offshore Container which certifies the compliance of the offshore container design type with the requirements of the Rules and with the indication of other applicable normative documents;

.1.6 Type Approval Certificate for Thermal Container which certifies the compliance of the thermal container design type with the requirements of the Rules and with the indication of other applicable normative documents;

.2 СТО which certifies the compliance of the types of materials, products or groups of products, type production processes with the requirements of the Rules;

.3 С:

.3.1 Certificate for Freight Containers which certifies the compliance of specific freight containers with the requirements of the CSC, CCC and the Rules;

.3.2 Certificate for Thermal Containers which certifies the compliance of specific thermal containers with the requirements of CSC, CCC and the Rules;

.3.3 Certificate for Tank Container which certifies the compliance of the specific tank container with the requirements of the CSC, CCC, IMDG Code and the Rules and with the indication of other applicable normative documents;

.3.4 Certificate for Offshore Containers which certifies the compliance of offshore containers with the requirements of the Rules and with the indication of other applicable normative documents;

.3.5 Certificate for Offshore Tank Container which certifies the compliance of a specific offshore tank container with the requirements of the Rules and with the indication of other applicable normative documents;

.3.6 Certificate is a document which certifies compliance of specific materials, products and groups of products with the requirements of the Rules and normative documents;

.4 Certificate (СЗ which is a certificate filled and signed by an official of the firm and drawn up (certified) by the Register) which is a document certifying the compliance of specific materials, products or groups of products with the Rules and normative documents;

.5 СПИ which certifies the Register recognition of a manufacturer as the manufacturer of materials and products which are under the Register technical supervision;

.6 СП which certifies the recognition of a service supplier rendering services (carrying out works) in compliance with the Register requirements;

.7 СПЛ which certifies the laboratory competence in the performance of certain types of tests of materials, products and containers;

.8 СПО which certifies the Register recognition of the firm performing inspections of freight containers (excluding tank containers) in service in compliance with the CSC requirements and 3.2 of the Rules for Technical Supervision of Containers in Service;

.9 ССП which certifies the conformity of the firm with the Register requirements in rendering the declared services (carrying out the declared work);

.10 СДС which is a document of the Register certifying that a particular welder has successfully passed the tests for certification in the scope of the requirements of the Rules and is allowed to perform welding work on structures subject to Register technical supervision within the scope of approval specified in the Certificate;

.11 СОТПС which is a document of the Register certifying that the welding process used at the shipyard or firm that manufactures welded structures has been tested and approved by the Register for application;

.12 СОСМ which certifies the compliance of welding consumables with the RS requirements;

.13 reports.

1.4.3 The validity period of СОД, listed in 1.4.2.1.1 – 1.4.2.1.4, is not specified. СОД are not valid for newly manufactured containers in case of expiration of the technical documentation validity period.

1.4.4 The validity period of СОД listed in 1.4.2.1.5 and 1.4.2.1.6 shall not exceed 6 years and the validity period of СТО listed in 1.4.2.2 shall not exceed 5 years. The validity period of СОД and СТО shall not exceed the approval period of the technical documentation for an item of technical supervision. Upon expiration of СОД and СТО validity period, it is renewed upon the request of the firm.

1.4.5 The validity period of С listed in 1.4.2.3.1 and 1.4.2.3.2 shall not exceed 5 years.

1.4.6 The validity period of С listed in 1.4.2.3.3 shall not exceed 2.5 years.

1.4.7 The validity period of С listed in 1.4.2.3.4 – 1.4.2.3.5 shall not exceed 1 year.

1.4.8 The validity period of СПИ, СПЛ, СПО and ССП listed in 1.4.2.5, 1.4.2.7 – 1.4.2.9 shall not exceed 5 years and is subject to endorsement not less than once a year. Endorsement shall be done within the period limited by 30 days before and 30 days after the date of the established endorsement date of the certificates.

The validity period of СП listed in 1.4.2.6 is 3 years and is not subject to endorsement.

Upon expiration of СП validity period, it is renewed upon the request of the firm.

RS reserves the right to carry out occasional surveys of a firm having a valid RS certificate in cases when:

.1 an item of technical supervision has been found non-complying with the RS requirements, in particular, based on information from a third party;

.2 the firm has not notified the Register either about the changes of the technical documentation for the item of technical supervision approved by the Register, or of changes of the item of technical supervision stated in the certificate.

1.4.9 Validity of the documents specified in 1.4.2.5 – 1.4.2.9 (СПИ, СП, СПЛ, СПО, ССП) may be suspended for a period agreed upon with the firm but not more than ninety (90) days from the specified date of endorsement, provided:

.1 reporting documents have not been properly drawn up;

.2 the firm has not applied with the request to endorse the certificate within the established period;

.3 the firm has not informed the Register of the changes in the activity specified in the certificate;

.4 a single nonconformity of the firm activity to the Register requirements have been found;

.5 an item of technical supervision has been found non-complying with the Register requirements, in particular, based on information from a third party;

.6 the firm has not notified the Register either about the changes of the technical documentation for the item of technical supervision approved by the Register or about changes of the item of technical supervision stated in the certificate.

1.4.10 СПИ, СП, СПЛ, СПО, ССП shall become invalid:

.1 upon expiry of the certificate period of validity;

.2 in case the certificate suspension reasons have not been eliminated within the agreed period;

.3 if the repeatedly detected non-conformities of the firm activity or an item of technical supervision to the Register requirements that have previously been found;

.4 the firm has not notified the Register either about the changes of the technical documentation for the item of technical supervision approved by the Register or about the changes of the item of technical supervision stated on the certificate affecting the safety of the objects of technical supervision or involving emergency cases;

.5 in case the certificate has not been endorsed within the specified period;

.6 in case the contract or agreement on technical supervision become void in cases stipulated under 4.6, Part I "General Regulations on Technical Supervision" of the Rules for Technical Supervision during Construction of Ships and Manufacture of Materials and Products for Ships;

.7 in case of the firm's bankruptcy or liquidation.

1.4.11 The Register informs the firm in the writing about the suspension and loss of validity of the certificate in cases specified in 1.4.9.1, 1.4.9.3 – 1.4.9.6 and 1.4.10.2 – 1.4.10.4 and 1.4.10.6.

1.4.12 The documents are issued by the Register on the basis of satisfactory technical condition determined for the supervised item by means of surveys and tests.

1.4.13 The Register documents wherein the owner or the applicant is specified, do not confirm the right of ownership of the item of technical supervision.

1.4.14 The Register shall be notified about all the modifications (introduction of alterations to the design) of the surveyed containers. Such containers may be tested to the necessary extent, if required by the Register.

1.4.15 The Register may fully or partly recognize the documents issued by other classification societies, technical supervision bodies and other organizations.

1.4.16 Under the circumstances indicated below, the Register is entitled to suspend the validity of the certificates specified in 1.4.2.1 – 1.4.2.4:

.1 structural defect of the design type approved by the Register has been revealed and the firm has not agreed the way to eliminate it with the Register within the specified terms;

.2 the firm has not notified the Register either about the changes in the technical documentation for the item of technical supervision approved by the Register or about the changes of the item of technical supervision stated in the certificate affecting the safety of the objects of technical supervision or involving emergency cases.

1.4.17 The validity of such documents may be restored, if the Register is satisfied that the grounds, which caused the loss of validity have been eliminated.

1.5 THE REGISTER RESPONSIBILITIES

1.5.1 The Register entrusts the performance of inspections to adequately qualified experts performing their work in accordance with their functional duties.

The Register is responsible for failure to perform or for improper performance of its commitments only in case of established fault and the cause-effect relation between the damage caused and the Register activity.

2 TECHNICAL SUPERVISION

2.1 GENERAL

2.1.1 The scope of the technical supervision includes:

.1 consideration of technical documentation;

.2 technical supervision during manufacture of materials and products, specified in the Rules, intended for subsequent manufacture of items of technical supervision;

.3 technical supervision during manufacture of containers;

.4 technical supervision of containers in service including repair and modernization of containers;

.5 recognition of firms (manufacturers), repair firms, design and engineering firms and other organizations involved in operation of containers, certification of laboratories for testing containers, materials and products intended for containers.;

.6 recognition of firms and organizations engaged in weighing the packed containers in compliance with IMO resolution MSC 380(94).

2.1.2 Containers subject to the Register technical supervision are specified in the Register Nomenclature, Table 2.1.2.

Table 2.1.2

Code of item of technical supervision	Name of item of technical supervision	Branding
30000000МК	**Containers**	
30010000МК	General freight containers	К
30020000МК	Thermal containers	К
30030000МК	Tank-containers	К
30030100МК	Tank-containers with fiber-reinforced plastic shell	К
30040000МК	Platform containers	К
30040100МК	Platform-based containers	К
30050000МК	Non-pressurized solid bulk containers	К
30060000МК	Named-cargo containers	К
30070000	Offshore containers	К
30070000МК	Offshore containers (if covered by the requirements of International Codices and/or Conventions)	К
30080000	Auxiliary offshore containers	К
30080000МК	Auxiliary offshore containers (if covered by the requirements of International Codices and/or Conventions)	К
30100000МК	Open top containers	К
30110000МК	Dry bulk tank containers	К
30120000МК	Containers capable of being folded	К

2.1.3 List of materials and products subject to the Register technical supervision is given in the Register Nomenclature, refer to Table 2.1.3.

Table 2.1.3

Code of item of technical supervision	Name of item of technical supervision	Group of item of technical supervision (1 — 5)	Branding	Remarks
50000000	**MATERIALS AND PRODUCTS FOR CONTAINERS**			
50010000	**Materials**			
50010100	General:			
50010110	materials of elements of the bearing structure of the container	1M	–	
50010200	Tank containers UN T1 — T22 and T50:			
50010210	shell material[1]	3M	–	
50010220	reinforcing ring material	1M	–	
50010230	heating system elements materials	1M	–	
50010240	insulation materials	1M	–	
50010300	Tank containers UN T75:			
50010310	inner vessel materials	4M	–	
50010320	fastening elements of the inner vessel materials	1M	–	
50010330	reinforcing ring materials	1M	–	
50010340	cooling system elements materials	1M	–	
50010350	outer vessel materials	1M	–	
50010360	insulation materials	1M	–	
50010400	Offshore containers:			
50010410	pad eyes materials	3M	–	
50010420	pad eye trim rings or bushings materials	1M	–	
50010500	Tank containers with FRP shell:			
50010510	reinforcing materials of the shell made of FRP	1M	–	
50010520	bonding materials of the shell made of FRP	1M	–	
50010530	elements of the heating system materials	1M	–	
50020000	**Products**			
50020100	Container elements			
50020110	End walls[2]	5M	–	
50020120	Side walls[2]	5M	–	
50020130	Base[2]	5M	–	
50020140	Panels:			
50020141	thermal containers[2]	5M	–	
50020150	Tank containers shells[2]	5M	К	
50020160	Tank containers heads[2]	5M	К	
50020170	Tank containers walls[2]	5M	К	
50020200	Corner and intermediate fittings	4M	К[3]	

Code of item of technical supervision	Name of item of technical supervision	Group of item of technical supervision (1 — 5)	Branding	Remarks
50020400MK	Tank container accessories			
50020410MK	Manlids[1]	2	–	+ CKK1
50020420MK	Frangible disks[1]:			
50020421MK	for tank containers UN T1 — T22 and T50	1	–	
50020422MK	for tank containers UN T75	2	–	
50020430MK	Fusible elements[1]	1	–	
50020440MK	Pressure-relief (safety) valves[1]:			
50020441MK	for tank containers UN T1 — T22 and T50	2	–	+ CKK1
50020442MK	for tank containers UN T75	4	–	
50020450MK	Vacuum valves[1]:			
50020451MK	for vacuum insulation of tank containers	1	–	
50020452MK	for tank containers UN T1 — T22 and T50	2	–	+ CKK1
50020453MK	for tank containers UN T75	4	–	
50020460MK	Stop valves[1]:			
50020461MK	for tank containers UN T1 — T22 and T50	2	–	+ CKK1
50020462MK	for tank containers UN T75	4	–	
50020500MK	Covers for containers	2M	–	
50020600MK	Ropes for fastening a cover to a container	2M	–	
50020700	Lifting set for offshore containers	3	K	
50020800	Components of lifting set for offshore containers[2]			
50080810	Shackles[2]	2M	–	
50080820	Links[2]	2M	–	
50080830	Ropes[2]	2M	–	
50080840	Thimbles[2]	1	–	
50080850	Ferrules[2]	1	–	
50020900	Refrigerating and/or heating appliances of a container	1[4]	–	
50021000	Supports for NiS material ingot[2]	1	–	
15110101	(Electrical) sensors and indicators of level[1]	2	–	
14000000	Welding consumables[5]	2M	–	

[1] For tank containers that are intended for the carriage of dangerous goods.
[2] For products supplied separately under cooperation agreement for assembly of containers or as spare parts.
[3] On each material and product tested under RS technical supervision.
[4] A document drawn up by the manufacturer in accordance with the standards of the firm, containing information sufficient for RS.
[5] Codes of groups "Welding consumables" and relative issued documents refer to Appendix 1, Part I "General Provisions for Technical Supervision" of the Rules for Technical Supervision During Construction of Ships and Manufacture of Materials and Products for Ships.

Code of item of technical supervision	Name of item of technical supervision	Group of item of technical supervision (1 — 5)	Branding	Remarks

Notes:

1. Groups of technical supervision are specified in accordance with Section 5, Part I "General Provisions for Technical Supervision" of the Rules for Technical Supervision During Construction of Ships and Manufacture of Materials and Products for Ships.

2. In case of one-time approval of materials of groups 2M — 4M, the survey is carried out in the scope corresponding to group 5M, with tests carried out in the scope agreed with the Register.

3. In the "Remarks" column, where "+CKK1" is indicated, the quality control system of the firm shall be checked with the issuance of the Manufacturer's Quality Control System Certificate (CKK1 Certificate).

2.1.4 Table 2.1.4 contains forms of technical supervision during design, manufacture and tests of containers which are chosen by the firm (manufacturer) and agreed with RS.

Table 2.1.4

Stage of technical supervision during manufacture of containers		**Forms of technical supervision**	
		1	**2**
Prototype (first lot)	Approval of technical documentation	x	
	Examination of welders, approval of welding consumables and welding procedures. Inspection of availability of internal monitoring system during manufacture of containers	x	
	Technical supervision during manufacture	x	
	Technical supervision during testing in the scope prescribed for a prototype	x	
	Survey of finished container(s)	x	
	Branding	x	
	Documents issued by RS	СОД and C[1]	СОД and C[1]
Type-series container[2]	Survey of the firm	–	СПИ
	Technical supervision during manufacture	x	–
	Technical supervision during testing to confirm manufacture stability	x	x
	Technical supervision during testing at serial manufacture	x	–[3]
	Survey of finished container(s)	x	x
	Branding	x	x
	Documents issued by RS	C[1]	C[1]

[1] Except for form 6.5.30.
[2] Serial manufacture of containers is carried out upon positive results of manufacture and test of a prototype (first lot).
[3] Required for tank containers and offshore containers.

Notes. 1. "x" means "required", "–" means "not required".
2. Requirements for firms (manufacturers) of containers to receive СПИ are specified in 1.5, Part I "Basic Requirements" of the Rules for the Manufacture of Containers.
3. Requirements for the scope of survey are specified in the Rules for Technical Supervision during Manufacture of Containers, Materials and Products for Containers.

2.1.5 RS carries out technical supervision for the activity indicated in Table 2.1.5.

Table 2.1.5

Code	Name of activities	Documents issued by RS
40000000	**Types of activities of the firms (service providers) on containers**	
40000001	Repair and modernization of tank containers	ССП or СП
40000002	Repair and modernization of containers except for tank containers	ССП or СП
40000003МК	Test of containers	СПЛ
40000004МК	Freight containers examination/inspection (except for tank containers) in service in compliance with the CSC requirements	СПО
40000005МК	Confirmation of gross mass of containers	СП
40000006	Preparation and tests of tank containers for periodical survey	ССП or СП
40000007	Design engineering services for containers and associated products[1]	ССП

[1] Carried out on a voluntary basis.

Note. Requirements for firms, excluding testing laboratories, are specified in Sections 4, 6 and 7 of the Rules for Technical Supervision of Containers in Service.

2.1.6 Materials and products applied during manufacture of containers are permitted to be installed subject to the availability of the certificates of compliance with requirements of the Rules or other documents confirming their compliance with RS requirements, Conventions and Codices, etc., normative documents as applicable to containers.

The containers, materials and products subject to the Register technical supervision shall be manufactured according to technical documentation approved by the Register.

Technical supervision during manufacture of containers, materials and products shall be performed in relation to those properties only, which are regulated by the Rules, as well as parameters and characteristics indicated in the approved technical documentation. During technical supervision the Register shall not determine a grade or a category of the product quality and shall not check if the safety engineering, sanitary and labor organization requirements are met, or other production aspects beyond the Register terms of reference.

2.1.7 Recognition of documents for materials and products manufactured under ACS technical supervision without Register authorization is defined in each case by the Register during survey of these materials and products in the scope sufficient to confirm their compliance with the Register requirements, Conventions, IMO recommendations, standards and normative documents.

2.1.8 In particular cases, at the RS discretion, technical supervision may be performed of the containers, materials and products not listed in the RS Nomenclature, which are newly developed (pilot specimens). Later, based on the results of technical supervision during manufacture of containers and in service, these containers, materials and products may be introduced in the relevant parts of the Rules for containers and the RS Nomenclature.

2.1.9 The basic method used by the Register in exercising technical supervision is random inspection, unless any other procedure has been adopted.

2.1.10 For the technical supervision to be carried out, container owners and firms shall provide RS surveyors with all conditions for the technical supervision to be performed:

provide the technical documentation necessary for work, particularly the factory records of the product quality control;

prepare the items of technical supervision to perform the survey to the extent required;

ensure safety of surveys;

provide for the presence of the officials authorized to present the items of technical supervision to surveys and tests;

timely notify the Register on time and venue of surveys and tests of the items of technical supervision.

If the manufacturer fails to comply with the terms of the technical supervision performance, the Register may refuse to carry out the surveys.

2.1.11 Container owners, design organizations and firms shall fulfill the requirements set forth by the Register to perform technical supervision.

2.1.12 Any changes relating to materials and the structural design of containers and products to which the requirements of the Rules apply, planned by container owners and firms, shall be approved by the Register before they are implemented.

2.1.13 Controversial issues arising in the course of technical supervision may be transferred by container owners, firms (manufacturers) and other interested organizations directly to the higher Register Branch Office. The decision of RHO is final.

2.1.14 The Register may refuse from the technical supervision in case when the firm systematically violates the Rules or contract on technical supervision concluded with the Register.

2.1.15 In case of revealing defects in a material or a product with a valid document, the Register may require additional tests or appropriate corrections to be made, and if the defect cannot be remedied, may cancel this document.

2.1.16 A container manufactured in conformity with the approved technical documentation shall undergo the appropriate tests according to the procedures set out in the relevant parts of the Rules for the Manufacture of Containers.

2.1.17 If, in the result of testing of the prototype(s), the design of type-series containers, the associated equipment or the process of manufacture shall be changed as compared with the approved documentation of the prototype, the firm (manufacturer) shall submit for consideration of the Register the documentation for series production of the containers, inclusive of the changes proposed, upon results of which RS may decide to carry out additional tests.

3 TECHNICAL DOCUMENTATION

3.1 GENERAL

3.1.1 Prior to the commencement of the manufacture of containers, materials and products, subject to the Register technical supervision, the appropriate technical documentation shall be submitted to the Register in the scope specified in the relevant parts of the Rules for the Manufacture of Containers.

Standards for certain materials and products agreed with the Register may substitute the documentation as a whole or a part thereof.

If necessary, the Register may require the scope of documentation to be increased.

The documents shall be submitted in electronic form, in Russian or in English, in pdf format, and the method of transferring files shall be agreed with the Register.

Where landmark decisions are taken, the performance specification, engineering proposal, concept design, preliminary design, as well as the research and development results may be submitted to the Register for review. Such documents are not subject to approval (agreement) and their review results are reported in a written conclusion (opinion).

3.1.2 Duration of the technical documentation review, specified in the relevant parts of the Rules for the Manufacture of Containers is no more than 20 working days from the date of the submission of a complete set or each part (if the technical documentation is provided by parts), signing the contract-requests/agreement, as well as when performing work under prepaid contracts-requests/contracts, after payment of the advance invoice in full.

The term for consideration of the technical documentation amended in accordance with the RS remarks is no more than 10 working days from the date of submission of the complete set, signing of the contract-request/agreement, as well as when performing work under prepaid contracts-requests/agreements, after payment of the advance invoice in full.

Duration of the documentation review may be reduced/extended upon agreement by the parties in each particular case.

The procedure, place, terms and other conditions of technical documentation review by the Register shall be determined upon agreement with the RS Branch Office responsible for review of technical documentation.

3.1.3 Any amendments to the technical documentation approved (agreed) by the Register that may relate to the requirements regulated by the RS rules or international conventions shall be approved (agreed) by the Register based on the results of review of the appropriate notifications on the amendments or of the reissued amended documents.

The amendments shall be detailed or specified in the amended documents, plans.

3.1.4 The technical documentation submitted for consideration to the Register shall be drawn up in such a way, or shall supply such particulars, so as to afford clear evidence that the requirements of the Rules are met. The technical documentation shall be signed by the persons responsible for the development and duly issued.

3.1.5 The calculations necessary for determining parameters and values regulated by the Rules shall be done according to the requirements of these Rules and according to procedures approved by the Register. The calculation procedures shall ensure sufficient accuracy of solving the problem, which is confirmed by prototype tests carried out under the appropriate provisions.

The Register does not verify the accuracy of calculations, including those obtainable from the computer, while taking into account their results during the consideration of the technical documentation.

Check calculations may be prepared using any program, if required by the Register.

3.1.6 The approval of technical documentation shall be confirmed by the corresponding stamps of the Register.

The approval does not apply to the elements and structures which are not covered by the Rules.

The documents contradicting the Register requirements shall be returned with comments to the designer for updating and/or correcting.

3.1.7 The production of containers subject to technical supervision of the Register shall be made according to the technical documentation approved by the Register.

3.2 DURATION OF VALIDITY OF APPROVED TECHNICAL DOCUMENTATION

3.2.1 The Register approval of the technical documentation is valid for the period of 6 years.

3.2.2 In justified cases, when serial products are manufactured, the validity term of the approved technical documentation specified in accordance with 3.2.1, may be extended by the Register for a period not longer than that required to manufacture (order) a batch of products.

3.2.3 The normative and technical documents for the containers and associated materials and products shall be approved for a period of their validity.

3.2.4 Irrespective of the approval validity, the technical documentation as well as agreed standards and other normative documents are subject to mandatory updating with regard to adopted requirements of international conventions and agreements that have come into force after approval of the documentation. All approved and agreed documentation is also subject to updating, with regard to the requirements of the RS circular letters prescribing their mandatory fulfillment.

3.2.5 The requirements of the Rules as well as of international conventions and agreements that are in effect on the date of submission of the documents shall be taken into consideration in the technical documentation submitted for re-approval upon expiry of validity of its previous approval.

3.2.6 The Register approval of the technical documentation loses its validity:

.1 upon expiry of approval validity;

.2 upon expiry of the documentation validity (where the term is indicated);

.3 in case amendments were introduced without consent of the Register into the approved documentation dealing with the issues, which are within the Register terms of reference.

3.2.7 The Register may cancel its approval of the technical documentation or change the terms of approval in the following cases:

.1 if the documentation has not been timely brought in line with the provisions of international conventions and agreements, as well as with the requirements of the RS circular letters;

.2 if the quality and reliability of materials and items are regularly low and do not meet the RS requirements.

4 KEEPING RECORD OF CONTAINERS

4.1 GENERAL

4.1.1 RHO keeps record on the following:

СОД for all types of containers;

СТО for products;

С, СЗ and survey reports for all types of containers issued during manufacture and in service;

СПИ, СПО, СП, ССП and СПЛ.

RULES
FOR THE MANUFACTURE OF CONTAINERS

PART I. BASIC REQUIREMENTS

1 GENERAL

1.1 APPLICATION

1.1.1 The requirements of the Rules for the Manufacture of Containers (hereinafter referred to as these Rules) apply to freight containers with gross mass of 10 t and more, intended for the carriage of goods by water, rail and road and for interchange between these modes of transport, unless expressly provided otherwise in these Rules.

Besides, the requirements of these Rules apply to offshore containers as well as to ship equipment storage containers in the scope applicable to such containers.

1.1.2 Requirements to the containers of ISO series 1 are set forth in Part I "Basic Requirements", II "General Freight Containers", III "Thermal Containers", IV "Tank Containers", V "Platform and Platform-based Containers", VI "Non-Pressurized Solid Bulk Containers" and VIII "Tank Containers with Fiber-Reinforced Plastic Shell" of these Rules.

1.1.3 Taking into account that there shall always be a need for special containers for particular transportation, containers may differ from ISO series 1 containers in dimensions and be in excess of the maximum gross masses specified in Table 2.1.2. Operation of such containers may require special arrangements and agreements.

1.1.4 Containers differing in design and dimensions from the requirements specified in these Rules are subject to special consideration by the Register in each particular case.

1.2 DEFINITIONS AND EXPLANATIONS

1.2.1 Definitions, abbreviations and explanations related to the general terminology of these Rules are given in 1.1 of General Regulations for the Technical Supervision of Containers.

1.3 APPROVAL OF CONTAINERS

1.3.1 Approval of containers means the decision of the Register that a design type or an individual container is safe within the terms of these Rules and is suitable for the transportation of cargoes according to designation.

1.3.2 The container manufactured and tested in accordance with the requirements of these Rules, is considered to be approved under the CSC, CCC and IMDG Code terms.

1.3.3 An application made in writing shall be submitted to the Register to obtain approval of a container by design type.

1.3.4 The application for approval for each design type of a container shall be accompanied by the following documentation:

.1 design or technical specification (for firms for which the container design specification is not provided according to the applied normative documents) of the container with description of its purpose, structure, technical characteristics, mechanical and chemical properties of materials involved, with indication of manufacturers of the components purchased under cooperation agreement, adopted welding procedures as well as methods of assembling, finish and painting;

.2 general view drawings, sectional views, drawings of assemblies and separate elements as well as the materials involved, drawings of marking and convention plates;

.3 prototype test list, test program and procedure of series containers to be performed at the firm (manufacturer).

Additional technical documentation may be required by the Register if considered necessary.

N o t e . The test program and procedures for a prototype shall be submitted by a testing laboratory during preparations for testing the prototype.

1.3.5 A prototype of a container shall be manufactured in accordance with the technical documentation approved by the Register and under the Register technical supervision at the firm where manufacture of type-series products is intended. The scope of supervision is set forth in the Rules for Technical Supervision during Manufacture of Containers, Materials and Products for Containers. A prototype shall be subjected to testing in accordance with these Rules in a laboratory recognized by the Register in the presence of the Register representative. In exceptional cases, tests may be conducted by a laboratory not having a Recognition Certificate, however, this shall be subject to special consideration by the Register.

Containers tested in accordance with procedures specified in ISO 1496 are considered tested in compliance with the CSC requirements.

1.3.6 With satisfactory results obtained in testing and surveying a prototype, the Register issues a Certificate of Container Safety Approval by Design Type to the applicant.

1.3.7 The Certificate of Approval shall entitle the applicant to affix a Safety Approval Plate (refer to 4.1) to every type-series container, manufactured under the Register technical supervision to the design type approved by the Register.

1.3.8 The Register may approve for service the containers manufactured as modifications of the approved design type, provided that the modifications do not affect the results of tests made in the course of approval by design type.

1.4 GENERAL REQUIREMENTS FOR FIRMS

1.4.1 General.

1.4.1.1 The requirements of this Chapter apply to all the firms carrying out the activity related to the items of the Register technical supervision and are subject to the verification of compliance and recognition by the Register.

1.4.1.2 The verification of compliance or recognition of the firm by the Register includes:

.1 review of the documents confirming compliance of the firm with the Register requirements;

.2 survey of the firm, including practical demonstration of completion of the works indicated in the request, verification of the records to ascertain that the firm organization and management are in compliance with the submitted documents and that the firm is able to perform works and render services, for which the recognition is requested. During periodical or renewal survey, to comply with this requirement the results of works or services endorsed by the Register may be used instead of the practical demonstration. The works performed or services rendered after the preceding survey may be accepted for review.

If the firm is unable to practically demonstrate the performance of works and specific services during the initial survey, the Register may issue a short-term certificate of recognition for a period not exceeding 90 days. The works listed in the short-term certificate shall be witnessed by the RS surveyor. Satisfactory results of works will be considered as a demonstration of the practical ability of the firm to perform the types of works for which recognition is requested, after that a certificate can be issued for the full term.

1.4.1.3 The firm shall submit for review:

.1 documents or their copies confirming compliance with the requirements of 1.4.2.1, 1.4.2.2, 1.4.2.6, 1.4.2.7 and 1.4.2.8.3 taking into account the relevant requirements of 1.5 – 1.7;

.2 list of the activities performed (area of activity);

.3 lists of the personnel containing information on compliance of the personnel with the requirements of 1.4.2.2.1 taking into account the relevant requirements of 1.5 – 1.7;

.4 lists of the equipment and facilities indicated in 1.4.2.3.1 and 1.4.2.4.1 as well as welding and testing equipment taking into account the relevant requirements of 1.5 – 1.7;

.5 lists of the documents indicated in 1.4.2.4.3 and 1.4.2.5.1 taking into account the relevant requirements of 1.5 – 1.7;

.6 verification of approval/recognition by other authorities, if any;

.7 information on other activities, which may affect a conflict;

.8 list and documentation on manufacturer's licenses, where applicable;

.9 list of appointed agents;

.10 firm experience in the area of services rendered.

1.4.1.4 Survey of the firm aims to confirm the compliance of the firm with the requirements of 1.4.2.

The requirements for the firms performing certain activities are specified in the relevant chapters.

1.4.1.5 Duration of the firm's documentation review shall comply with that indicated in 3.1.2, Part I of the General Regulations for the Technical Supervision of Containers.

1.4.2 Requirements.

1.4.2.1 *Legal status.*

1.4.2.1.1 Legal status of the firm shall comply with the current legislation.

1.4.2.1.2 The firm shall have organizational structure and the chief executive officer.

1.4.2.2 *Personnel*.

1.4.2.2.1 Personnel of the firm shall have the appropriate education, vocational and special training, qualification and experience required to perform the activity in the area indicated.

1.4.2.2.2 The firm is responsible for qualification and professional training of its personnel in compliance with the national, international and industrial standards; and in case of absence of such standards – in compliance with the standards of the firm. This requirement shall be established in the documents of the firm.

1.4.2.3 *Technique*.

1.4.2.3.1 The firm shall have the technique necessary to perform the activity in the area indicated in the request, including appropriate equipment, premises and facilities certified in the established order.

1.4.2.3.2 The firm shall provide the maintenance of the equipment and facilities in compliance with their operating and maintenance documentation.

1.4.2.3.3 The firm shall perform the activity on the technical documentation corresponding to each activity in the area indicated in the request with regard to the environmental conditions.

1.4.2.4 *Measurement assurance*.

1.4.2.4.1 The firm shall have and apply the necessary measurement assurance, namely:

.1 measuring equipment verified (calibrated) in accordance with the established procedure;

.2 testing equipment certified in accordance with the established procedure;

.3 references and type specimens;

.4 appropriate consumables (chemicals, substances, etc.).

1.4.2.4.2 The firm shall provide the maintenance of measuring and testing equipment in compliance with their operating and maintenance documentation.

1.4.2.4.3 The firm shall have and adhere to the current standard and certified procedures approved by the Register:

.1 for testing of items of technical supervision with the required accuracy;

.2 for handling of samples.

1.4.2.5 *Files of the firm documents*.

1.4.2.5.1 The firm shall have the valid normative and technical documents necessary to perform activity in the area indicated in the request, including:

.1 documents containing requirements for items of technical supervision, including the RS rules;

.2 technical documentation on items of technical supervision approved by the Register;

.3 production documentation on performance, checking and control of each kind of activity.

1.4.2.5.2 The documentation shall be available for the firm personnel where necessary.

1.4.2.6 *Reporting*.

1.4.2.6.1 Form and content of reports in the area indicated in the request shall be acceptable for the Register and shall include:

.1 name and address of the firm;

.2 identification of the report, e.g. report number;

.3 name and address of the customer;

.4 reference to the documents, in compliance with which the activity has been performed;

.5 description (name) of the item, in relation to which the activity has been performed;

.6 place where the activity has been performed;

.7 date when the activity has been performed;

.8 information on conditions, under which the activity has been performed;

.9 information on deviations from the requirements of the documents, in compliance with which the activity has been performed;

.10 entry that the activity has been performed under the RS technical supervision;

.11 full name, position and signature of the person who approved the report;

.12 number of every page and the total number of pages in the report.

1.4.2.6.2 Reports shall be stored in the firm for not less than five years under conditions of confidentiality. This requirement shall be specified in the firm documents.

1.4.2.7 *Checking and control*.

1.4.2.7.1 The firm shall do the checking and exercise control specified in the documentation for each kind of activity.

1.4.2.7.2 The firm shall take measures on elimination and prevention of non-conformities and complaints against the firm activity in the area indicated in the request. This requirement shall be specified in the firm documents.

1.4.2.8 *Subcontractors*.

1.4.2.8.1 Subcontractors recruited by the firm to perform the activity in the area indicated in the request shall fulfill the requirements of this Section.

1.4.2.8.2 The firm shall provide the audit of subcontractors' activity in the area indicated in the request.

1.4.2.8.3 The firm shall have agreements with subcontractors in the area indicated in the request.

1.4.2.9 *Information on alterations to the certified service operation system*.

1.4.2.9.1 In case where any alteration to the certified service operation system of the supplier is made, such alteration shall be immediately reported to the Register. Re-audit may be required when deemed necessary by the Register.

1.5 RECOGNITION OF FIRMS (MANUFACTURERS)

1.5.1 General.

1.5.1.1 The requirements of this Chapter cover firms (manufacturers) of containers, materials and products for containers listed in the register nomenclature.

1.5.1.2 The firm shall meet the requirements of 1.4 and the requirements of this Chapter.

1.5.1.3 Recognition of the firm by the Register is confirmed by issuing the Recognition Certificate in accordance with 1.4 of the General Regulations for the Technical Supervision of Containers.

N o t e . The firms newly entering upon the manufacture of containers in order to obtain the Recognition Certificate for Manufacturer (СПИ) shall manufacture at least 20 containers under the Register technical supervision.

1.5.1.4 The firm shall inform the Register of the existing experience required for manufacture and shall also submit for review:

.1 particulars of tests which may be carried out at the firm;

.2 document (route map) describing the technological process of manufacturing;

.3 production processes of welding for approval or copies of approved production processes of welding (if applicable);

.4 Welder Certification Program if welders approved by the Register are unavailable or copies of Welders Approval Test Certificates (if applicable);

.5 copies of certificates and licenses issued previously (if any).

N o t e . The firm (manufacture) of offshore containers shall have valid Quality Management System (QMS) complying with ISO 9001.

1.5.1.5 The firm shall carry out checking and control of the compliance of materials and accessories with the approved documentation, as well as control of the process of manufacture and testing.

1.5.2 Requirements.

1.5.2.1 *Personnel*.

1.5.2.1.1 The firm shall have documents on the personnel containing the following information:

.1 functional duties;

.2 personnel training and its terms of validity;

.3 certification and terms of its performance.

1.5.2.1.2 **T**he firm shall have the regular staff of specialists.

1.5.2.1.3 The firm shall have and adhere to the plans (schedules) for:

.1 training and re-training of the personnel;

.2 certification of the personnel with respect to certain activities.

1.5.2.1.4 Welders shall be certified by the Register. When manufacturing tank containers, the firm shall have specialists in non-destructive testing.

1.5.2.2 *Technique*.

1.5.2.2.1 The firm shall have the lists of equipment, premises and facilities necessary to perform its activity in the area indicated.

1.5.2.2.2 The firm shall have and adhere to the schedules of maintenance of the equipment and facilities.

1.5.2.3 *Measurement assurance*.

1.5.2.3.1 In cases when testing of materials and products is carried out in the testing laboratory, this laboratory shall comply with the requirements stated in Chapter 1.6.

1.5.2.4 *Files of the firm documents*.

1.5.2.4.1 The firm shall have the valid normative and technical documents necessary to perform activity in the area indicated in the request, including:

.1 list of the activities performed (area of recognition);

.2 operating and maintenance documents of the equipment;

.3 operating and maintenance documents of measuring instruments and metrological equipment;
.4 duty regulations;
.5 documents on records keeping and archives maintenance.
.6 the description of the operation checking system of the manufacture;
.7 the description of the periodical monitoring system for production processes;
.8 approved welding production processes (if applicable).

1.5.2.5 *Quality Management System*.

1.5.2.5.1 The firm shall have a documented quality management system to cover at least the following:
.1 the Code of Ethics to conduct the relevant activity;
.2 maintenance of equipment;
.3 measurement assurance, checking (calibration) of measuring equipment;
.4 training programs of operators/technicians/surveyors;
.5 supervision and verification to ensure compliance with operational procedures;
.6 recording and reporting of information;
.7 quality management of subsidiaries, agents and subcontractors;
.8 job preparation;
.9 corrective and preventive actions related to complaints;
.10 periodic review of work process procedures, complaints, corrective actions, and issuance, maintenance and control of documents.

1.5.2.6 *Reporting*.

1.5.2.6.1 Reporting documents on the manufacture of containers shall include additionally:
.1 manufacturer's number of the container, code and number of the container owner;
.2 date of launching the production;
.3 marks on passing operation checking with the signatures of responsible persons;
.4 sheets of containers measurement to the extent specified in the Register rules.

1.5.2.6.2 The firm shall keep records (databases) of the containers and/or equipment manufactured and delivered to customers.

1.6 RECOGNITION OF TESTING LABORATORIES

1.6.1 General.

1.6.1.1 The requirements of this Chapter apply to testing laboratories (TL) conducting tests and measurements of containers.

1.6.1.2 The testing laboratory shall meet the requirements listed in 1.4 and the requirements of this Chapter.

1.6.1.3 Recognition of TL by the Register is confirmed by СПЛ issued in compliance with 1.4 of the General Regulations for the Technical Supervision of Containers.

1.6.1.4 For firms recognized by the Register and incorporating a TL, the Recognition Certificate of Testing Laboratory may be issued, provided that the TL is able to demonstrate impartiality in the field of testing.

N o t e . Containers may be tested in third-party testing laboratories approved by the Register.

1.6.1.5 In particular cases, at the discretion of the Register, tests may be conducted at the testing laboratories not recognized by the Register. In so doing, prior to the tests performance the compliance of the testing laboratory with the requirements listed in 1.4 and requirements of 1.6.2.1.1, 1.6.2.2.1, 1.6.2.2.2, 1.6.2.4.1, 1.6.2.4.2, 1.6.2.5 and 1.6.2.6 shall be verified.

1.6.1.6 Recognition of the testing laboratory by the Register includes:

.1 review of the documents confirming compliance of TL with the Register requirements;

.2 survey of the testing laboratory and participation in check tests.

1.6.2 Requirements.

1.6.2.1 *Personnel*.

1.6.2.1.1 The testing laboratory is responsible for the qualification and vocational training of its personnel. The personnel of the testing laboratory shall have the work experience of at least 2 years.

1.6.2.1.2 The testing laboratory shall have documents on the personnel containing the following information:

.1 functional duties;

.2 education;

.3 experience;

.4 personnel training and its terms of validity;

.5 certification and terms of its performance.

1.6.2.1.3 The testing laboratory shall have the regular staff of specialists.

1.6.2.1.4 The testing laboratory shall have and adhere to the plans for:

.1 training and re-training of the personnel;

.2 refresher training of the personnel;

.3 certification of the personnel with respect to carrying out certain tests.

1.6.2.2 *Technique*.

1.6.2.2.1 The technique of the testing laboratory shall comply with the test procedures used for carrying out the tests specified in the Register requirements for items of technical supervision.

1.6.2.2.2 Tests shall be carried out according to the appropriate test procedures considering also the environmental conditions corresponding to each type of tests in the area indicated in the request. Use shall be made of:

.1 measuring instruments checked (calibrated) in accordance with the established procedure;

.2 certified testing equipment;

.3 ancillary equipment;

.4 references and type specimens for maintenance and measurement assurance of measuring instruments;

.5 appropriate consumables (chemicals, substances, etc.).

1.6.2.2.3 The testing laboratory shall have valid contracts for rented testing and measuring instruments.

1.6.2.2.4 The testing laboratory shall have the lists of:

.1 measuring instruments including that for certification of testing equipment;

.2 testing and ancillary equipment;

.3 references and standard specimens.

1.6.2.2.5 The testing laboratory shall have and adhere to the schedules for:

.1 maintenance of measuring and testing equipment;

.2 checking (calibration) of measuring equipment;

.3 certification of testing equipment.

1.6.2.3 *Files of the testing laboratory documents*.

1.6.2.3.1 The testing laboratory shall have valid normative and technical documents necessary to carry out tests in the area indicated in the request, including:

.1 list of the activities performed (area of recognition);

.2 Quality Manual or another similar document;

.3 duty regulations;

.4 operating and maintenance documentation on measuring and testing equipment;

.5 documents on records keeping and archives maintenance;

.6 valid test procedures for testing items of technical supervision with the required accuracy.

1.6.2.4 *Reporting*.

1.6.2.4.1 In addition to the information specified in 1.4.2.6.1, test reports shall contain the following:

.1 designation: "Test Report" or "Conclusion";

.2 name and address of the testing laboratory;

.3 designation of the testing method with reference to the documents, in accordance with which the tests have been conducted;

.4 reference to the Sampling Report;

.5 test results with indication of units of measurements in accordance with the testing procedures;

.6 indication that the test results are valid only for the products tested;

.7 entry that the tests have been witnessed by the RS representative.

1.6.2.4.2 Sampling reports, where applicable, shall contain:

.1 date of the specimen selection (sampling);

.2 information that allows for unambiguous identification of specimens (samples) taken;

.3 place of the specimen selection (sampling);

.4 information on conditions of the specimen selection (sampling);

.5 reference to the documents, in accordance with which the specimens have been taken (sampling has been done).

1.6.2.4.3 Data (documents) confirming performance of tests (sampling reports, test reports, etc.) shall be kept in the testing laboratory for not less than five years under conditions of confidentiality. This requirement shall be established in the documents of the testing laboratory.

1.6.2.5 *Checking and control*.

1.6.2.5.1 The testing laboratory shall do the checking and exercise control over the test results.

1.6.2.5.2 The personnel of the testing laboratory responsible for checking (control) shall have not less than two years of experience as a performer in the area of activity indicated in the request.

1.6.2.5.3 The testing laboratory shall conduct check tests in compliance with the area of recognition indicated in the request witnessed by the RS representative.

1.6.2.6 *Conditions of taking, transport and storage of samples (if applicable)*.

1.6.2.6.1 Conditions of taking, transport and storage of samples shall meet the requirements of the testing procedures.

1.6.2.6.2 The testing laboratory shall identify the samples.

1.7 VERIFICATION OF DESIGN AND ENGINEERING FIRMS OF CONTAINERS AND ASSOCIATED PRODUCTS

1.7.1 General.

1.7.1.1 Verification of compliance of design and engineering firms of containers and products operating in accordance with code 40000007 is carried out on a voluntary basis. The verification includes consideration of documents confirming that design and engineering firms are in compliance with the requirements of the Register and design and engineering firms' certification.

1.7.1.2 Compliance of such firms with the established requirements is confirmed by a Certificate of Manufacturer Conformity (ССП).

1.7.1.3 The design and engineering firms shall submit for review:

.1 documents or their copies confirming compliance with the requirements of 1.4.2.1;

.2 information and documents confirming the education, experience and qualifications of the personnel involved in designing;

.3 lists of current regulatory documents;

.4 information on software products used in design;

.5 information on subcontractors (if any).

1.7.2 Requirements.

1.7.2.1 *Personnel*.

1.7.2.1.1 The firm shall have documents on the personnel containing the following information:

.1 functional duties,

.2 vocational training and its terms of validity.

1.7.2.1.2 The design and engineering firm shall have permanent staff, have and adhere to the plans (schedules) for training and retraining of personnel.

1.7.2.1.3 Personnel of the design and engineering firm shall demonstrate knowledge of the regulatory requirements for the equipment designed, knowledge of the principles of the unified system of design documentation, knowledge of software products used in the design and drawing up of documentation in the electronic format. If any subcontractors are involved in designing and engineering (e.g. for calculations), the design and engineering firm shall report on the terms of cooperation with such organizations.

1.7.2.2 *Files of documents*.

1.7.2.2.1 The design and engineering firm shall have valid (updated) normative documents legally acquired, other necessary reference books, dictionaries, etc. necessary for the implementation of activities, have documents on records management and archive maintenance.

2 GENERAL TECHNICAL DATA

2.1 DIMENSIONS AND MASS

2.1.1 The dimensions and mass as well as the specific structural details of containers shall preferably comply with the international standards or national standards recognized by the Register.

2.1.2 External dimensions and tolerances as well as the maximum gross mass R of ISO series 1 containers are shown in Table 2.1.2. The dimensions and tolerances cited correspond to the measurements obtained at a temperature of 20 °C. If the measurements are taken at another temperature an appropriate tolerance shall be introduced.

2.1.3 No element of the container structure shall protrude over the external dimensions.

Table 2.1.2

Dimen-sion	Height H, mm	Width W, mm	Length L, mm	Maximum gross mass R, kg	Distance between centers of apertures in fittings, mm (reference)			k_{1max}, mm	k_{2max}, mm
					S corner fittings	S_1(intermediate fittings)	P		
1EEE	2896^{0}_{-5}	2438^{0}_{-5}	13716^{0}_{-10}	30480	13509^{+7}_{-6}	11985^{+7}_{-6}	$2259^{\pm4}$	19	10
1EE	2591^{0}_{-5}	2438^{0}_{-5}	13716^{0}_{-10}	30480	13509^{+7}_{-6}	11985^{+7}_{-6}	$2259^{\pm4}$	19	10
1AAA	2896^{0}_{-5}	2438^{0}_{-5}	12192^{0}_{-10}	30480	11985^{+7}_{-6}	–	$2259^{\pm4}$	19	10
1AA	2591^{0}_{-5}	2438^{0}_{-5}	12192^{0}_{-10}	30480	11985^{+7}_{-6}	–	$2259^{\pm4}$	19	10
1A	2438^{0}_{-5}	2438^{0}_{-5}	12192^{0}_{-10}	30480	11985^{+7}_{-6}	–	$2259^{\pm4}$	19	10
1AX	< 2438	2438^{0}_{-5}	12192^{0}_{-10}	30480	11985^{+7}_{-6}	–	$2259^{\pm4}$	19	10
1BBB	2896^{0}_{-5}	2438^{0}_{-5}	9125^{0}_{-10}	30480	8918^{+7}_{-6}	–	$2259^{\pm4}$	16	10
1BB	2591^{0}_{-5}	2438^{0}_{-5}	9125^{0}_{-10}	30480	8918^{+7}_{-6}	–	$2259^{\pm4}$	16	10
1B	2438^{0}_{-5}	2438^{0}_{-5}	9125^{0}_{-10}	30480	8918^{+7}_{-6}	–	$2259^{\pm4}$	16	10
1BX	< 2438	2438^{0}_{-5}	9125^{0}_{-10}	30480	8918^{+7}_{-6}	–	$2259^{\pm4}$	16	10
1CCC	2896^{0}_{-5}	2438^{0}_{-5}	6058^{0}_{-6}	30480	5853^{+5}_{-4}	–	$2259^{\pm4}$	13	10
1CC	2591^{0}_{-5}	2438^{0}_{-5}	6058^{0}_{-6}	30480	5853^{+5}_{-4}	–	$2259^{\pm4}$	13	10
1C	2438^{0}_{-5}	2438^{0}_{-5}	6058^{0}_{-6}	30480	5853^{+5}_{-4}	–	$2259^{\pm4}$	13	10
1CX	< 2438	2438^{0}_{-5}	6058^{0}_{-6}	30480	5853^{+5}_{-4}	–	$2259^{\pm4}$	13	10
1D	2438^{0}_{-5}	2438^{0}_{-5}	2991^{0}_{-6}	10160	$2787^{\pm4}$	–	$2259^{\pm4}$	10	10
1DX	< 2438	2438^{0}_{-5}	2991^{0}_{-6}	10160	$2787^{\pm4}$	–	$2259^{\pm4}$	10	10

Notes: 1 ISO series 1 containers with a gross mass exceeding that indicated in the table, but not more than 36000 kg are ISO containers.
Such containers shall be properly labeled and properly tested.
2. Attention shall be given to the required accurate adherence to the reference dimensions S and P (see Figs. 2.2.1-5 and 2.2.1-6). The tolerances applied to S and P are determined by the tolerances specified for the total length and width of a container in ISO 1161.

2.2 POSITIONAL RELATIONSHIP OF FITTINGS

2.2.1 Positional relationship of the container fittings shall comply with the valid ISO 668. These parameters are given in Figs. 2.2.1-1 and 2.2.1-2 and in Table 2.1.2.

2.2.2 The upper faces of top corner fittings shall protrude above the top of the container by a minimum of 6 mm. By the top of the container the highest point of the container roof is meant with no allowance made for thickness of doubler plates of top rails and the roof.

If protective plates are provided in the vicinity of the top corner fittings, such plates shall not protrude above the upper faces of the top corner fittings and shall not extend more than 750 mm from either end of the container or on either side of intermediate fittings but may extend the full width.

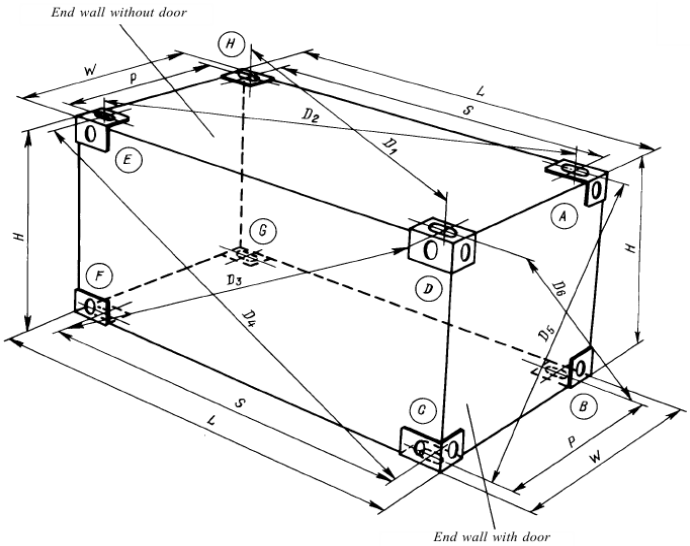

Fig. 2.2.1-1
Assembled corner fittings position:

L — external length of the container; *W* —external width of the container; *H* —overall height; *S* —length between centres of apertures in corner fittings; *P* — width between centres of apertures in corner fittings; *D* — distance between centres of apertures (or projected reference points therefrom) of diagonally opposite corner fittings resulting in six measurements: D_1, D_2, D_3, D_4, D_5, D_6, K_1 —difference between D_1 and D_2 or between D_3 and D_4 (i.e. $K_1 = D_1 - D_2$ or $K = D_8 - D_9$); K_2 –difference between D_5 and D_6 (i.e. $K_2 = D_5 - D_6$).
Letters shown in circles serve for reference when dealing with documentation

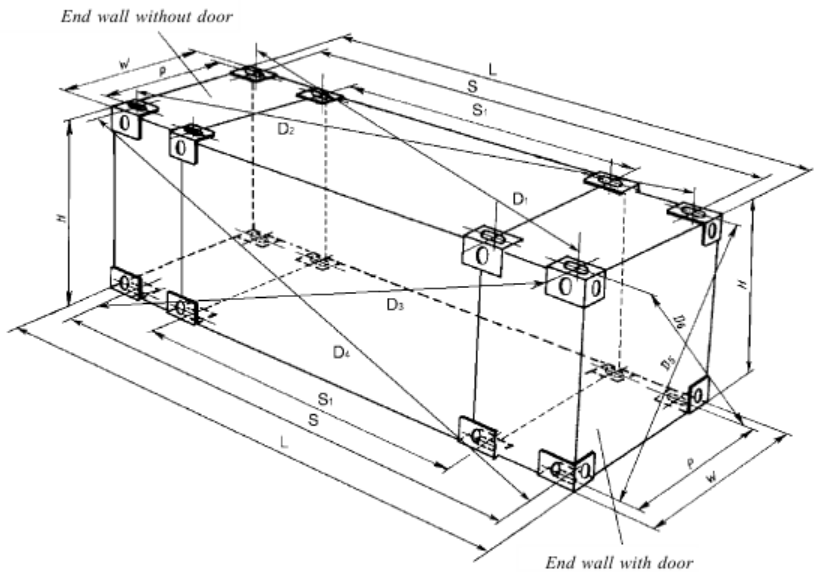

Fig. 2.2.1-2
Positional relationship of 1EEE and 1EE container fittings

Refer to symbols in Fig. 2.2.1-1. S_1= length between centres of apertures in intermediate fittings

2.3 BASE STRUCTURE

2.3.1 Under conditions of dynamic and static tests with the container having a uniformly distributed internal load such that the combined mass of the container and test load is equal to $1{,}8R$, no part of the base shall deflect by more than 6 mm below the base plane (bottom faces of bottom corner fittings). Under conditions of static loads with the container having a uniformly distributed internal load P, no part of its base shall protrude beyond the plane formed by bottom faces of bottom corner fittings.

2.3.2 Containers except for 1D and 1DX shall have load transfer areas in their base structure in the same plane, to permit vertical load transfer when carried on chassis.

2.3.2.1 The distances between the plane formed by lower faces of load transfer areas and the base plane (bottom faces of the bottom corner fittings) shall be$12{,}5^{+5}_{-1{,}5}$mm.

2.3.2.2 Apart from bottom fittings and bottom side rails, no part of the container shall project below the level of load transfer areas. However, doubler plates may be provided in the vicinity of bottom corner fittings to afford protection to the understructure.

Such plates shall not extend for more than 550 mm from the outer end for more than 470 mm from the side faces of bottom fittings, and their lower faces shall be at least 5 mm above the lower faces of the bottom fittings of the container.

2.3.2.3 Load transfer areas of the end and intermediate transverse members in base structures of containers (except for tank containers) shall cover zones of not less than 375 mm in width, not less than 25 mm in length and be located as shown in Fig. 2.3.2.3.

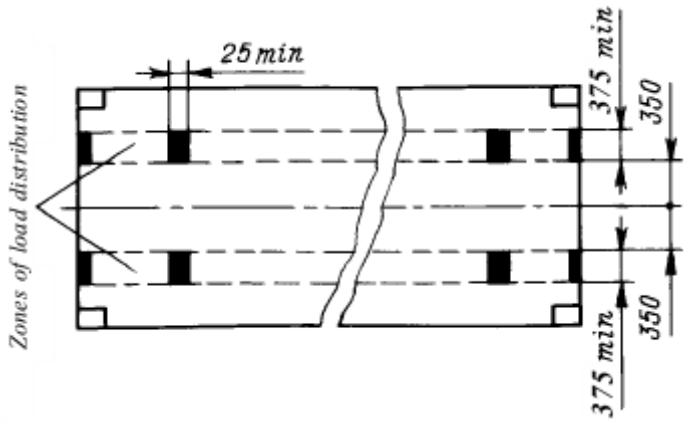

Fig. 2.3.2.3
Zones of load distribution, mm

2.3.2.4 Load transfer areas of tank containers shall be at least 250 mm wide, laterally – not less than 75 mm which are assumed to lie within zones defined in Fig. 2.3.2.3.

2.3.2.5 At the containers having over 4 pairs of load transfer areas, the latter shall be separated, as far as practicable, evenly along the length of the container. The load transfer areas shall be so arranged as to provide sufficient contact with chassis at:

.1 bottom end rails and cross-members spaced 1000 mm and less apart, at least, as shown in Figs. 2.3.2.5.1-1 – 2.3.2.5.1-4;

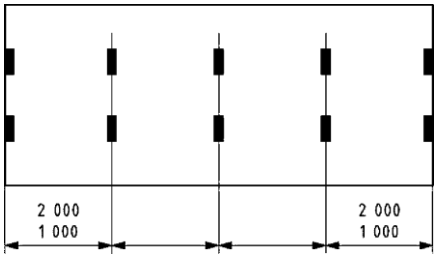

Fig. 2.3.2.5.1-1
Load transfer areas of 1CC, 1C and 1CX containers with 5 pairs of load transfer areas

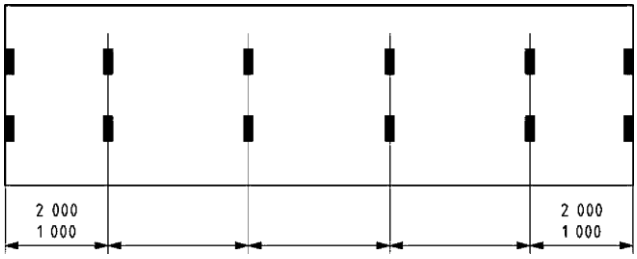

Fig. 2.3.2.5.1-2
Load transfer areas of 1BBB, 1BB, 1B, 1BX and 1CCC containers with 6 pairs of load transfer areas

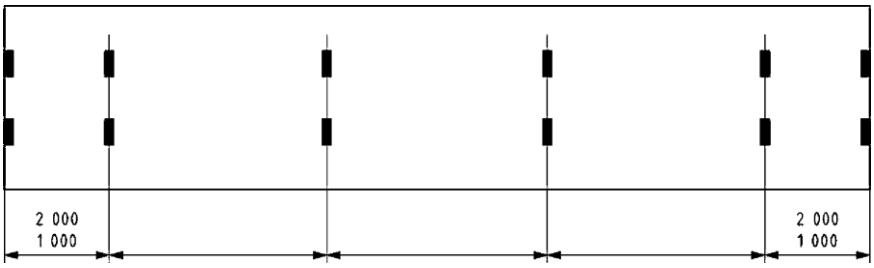

Fig. 2.3.2.5.1-3
Load transfer areas of 1EE, 1AA, 1A and 1AX containers without gooseneck tunnel with 6 pairs of load transfer areas

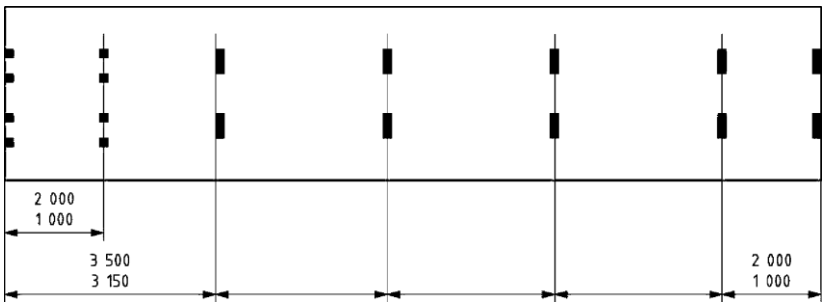

Fig. 2.3.2.5.1-4
Load transfer areas of 1EEE, 1EE, 1AAA, 1AA, 1A and 1AX containers with 7 pairs of load transfer areas

.2 bottom end rails and base cross-members, as well as at gooseneck tunnel at least as shown in Figs. 2.3.2.5.2-1 – 2.3.2.5.2-4.

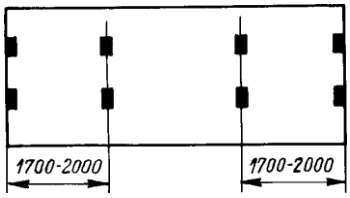

Fig. 2.3.2.5.2-1
Load transfer areas (in 1CCC, 1CC, 1C and 1CX containers)

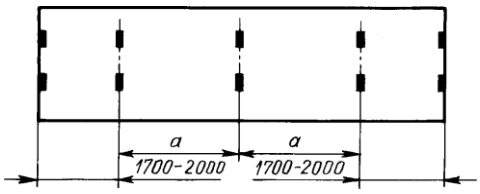

Fig. 2.3.2.5.2-2
Load transfer areas (in 1BBB, 1BB, 1B and 1BX containers)

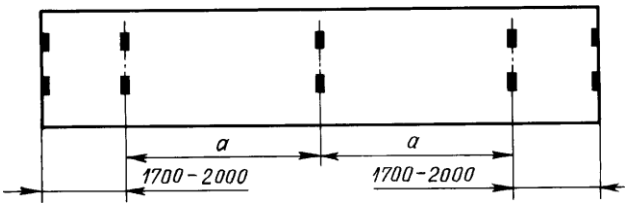

Fig. 2.3.2.5.2-3
Load transfer areas (in 1EE, 1AA, 1A and 1AX containers without gooseneck tunnel)

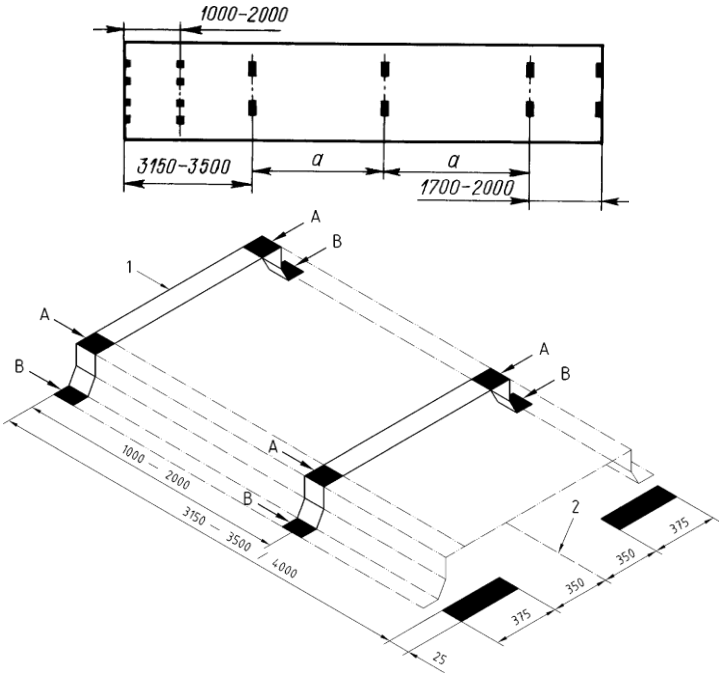

Fig. 2.3.2.5.2-4
Load transfer areas (1EEE, 1EE, 1AAA, 1AA, 1A and 1AX containers with gooseneck tunnel):

1 – front of container; 2 – central axis of symmetry of container

N o t e . Each load transfer area at the tunnel has 2 components: an upper component A and a lower component B. This paired set, A and B, shall be taken as one load transfer area and the sum of the two components, A + B, being equal to or greater than 1250 mm². Where continuous tunnel side members are provided, forming the internal dimensions (including height) specified in 2.6.3, load transfer areas between 3150 and 3500 mm (between 3150 and 4000 mm for 1EEE and 1EE containers) from the end of the container may be omitted.

2.3.3 All containers shall be constructed so that they can rest only on the bottom corner and/or intermediate fittings for containers IEEE and 1EE.

2.3.4 1EEE, 1EE, 1AAA, 1AA, 1A, 1AX, 1BBB, 1BB, 1B, 1BX, 1CCC, 1CC, 1C and 1CX containers shall be, moreover, so constructed that they can rest only on the load transfer area in their base structure when carried on chassis.

3.2.5 1EEE and 1EE containers shall have recesses in the longitudinal members of the base structure directed from intermediate fittings towards corner fittings. These recesses shall extend vertically for not less than 76 mm above the plane of bottom faces of intermediate fittings, shall extend longitudinally for not less than 254 mm from the centre of the bottom aperture in intermediate fittings directed towards corner fittings, and shall extend laterally for not less than 154 mm inboard from the external side face of the intermediate fitting (refer to Fig. 2.3.5).

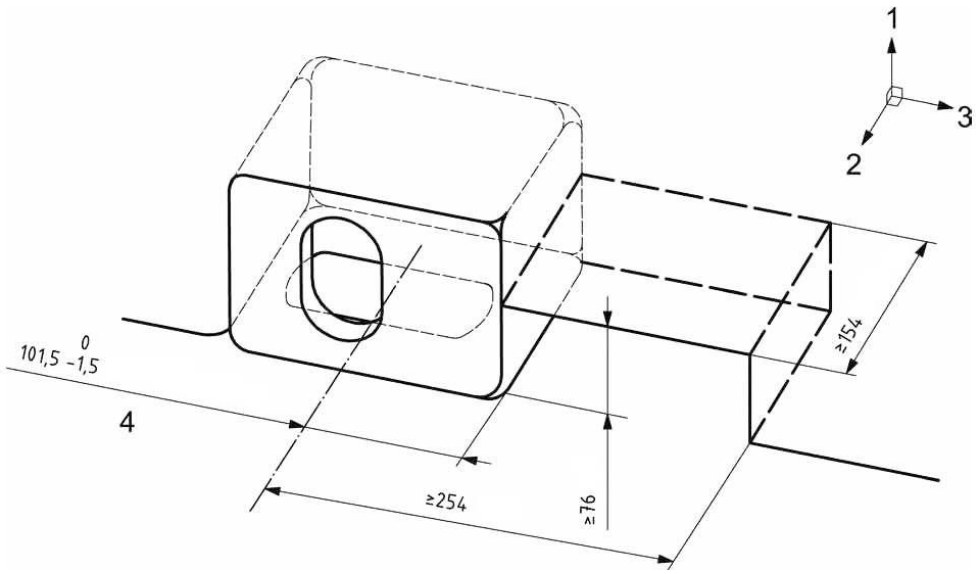

Fig. 2.3.5:

1 – top; *2* – outboard; *3* – end of container and corner fitting;
4 – axis of symmetry of the intermediate fitting bottom aperture

2.4 END STRUCTURE

2.4.1 For 1EEE, 1EE, 1AAA, 1AA, 1A, 1AX, 1BBB, 1BB, 1B, 1BX, 1CCC, ICC, 1C and 1CX containers sideways deflection of the top with respect to the bottom of container while under full transverse racking test condition shall not cause the sum of the changes in length of diagonals D_5 and D_6 (refer to Fig. 2.2.1 5), to exceed 60 mm.

2.5 SIDE STRUCTURE

2.5.1 For 1EEE, 1EE, 1AAA, 1AA, 1A, 1AX, 1BBB, 1BB, 1B, 1BX, 1CCC, 1CC, 1C and 1CX containers the longitudinal deflection of the top with respect to the bottom of container while under full longitudinal racking test condition shall not exceed 25 mm.

2.6 OPTIONAL STRUCTURES

2.6.1 Fork lift pockets.

2.6.1.1 Fork lift pockets may be provided for 1CCC, 1CC, 1C, 1CX, 1D and 1DX containers; no pockets shall be provided for tank containers.

Fork-lift pockets shall not be provided on 1 EEE, 1 EE, 1AAA, 1AA, 1A, 1AX, 1BBB, 1BB, 1B and 1BX containers.

Position and dimensions of pockets are shown in Fig. 2.6.1.1.

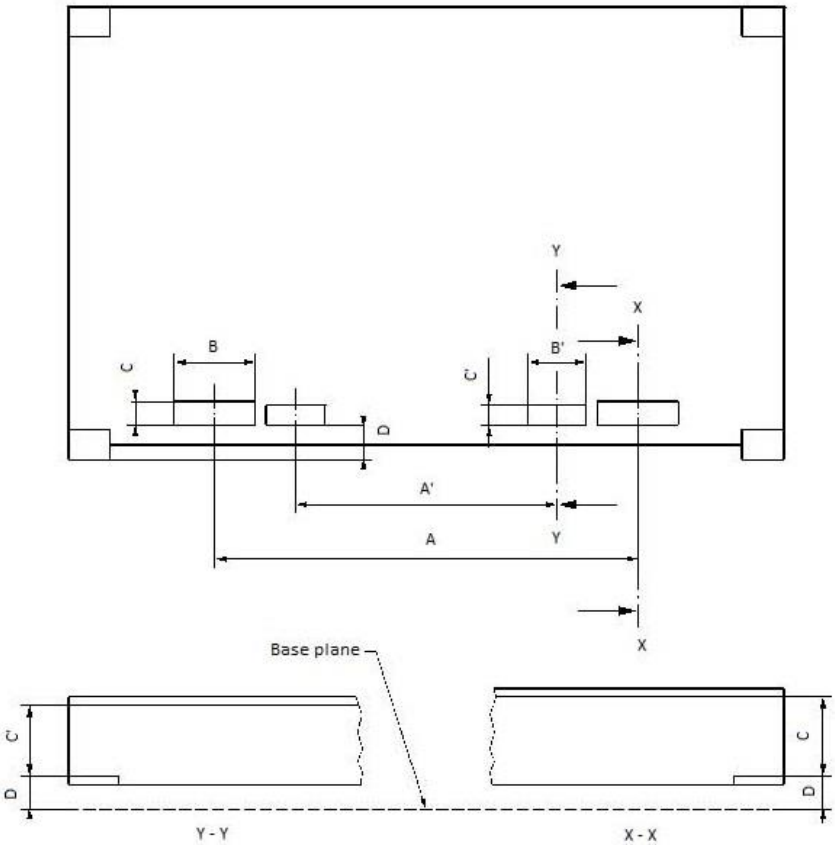

Fig. 2.6.1.1
Position and dimensions of fork lift pockets

Table 2.6.1.1

Dimension	Dimensions and tolerances, mm						
	Pockets for loaded and empty container				Pockets for an empty container		
	A	B	C	D	A'	B'	C'
1CCC, 1CC, 1C, 1CX	2050±50	355 min.	115 min.	20 min.	900+50	305 min.	102 min.
1D, 1DX	900±50	305 min.	102 min.	20 min.			

2.6.1.2 The fork pockets shall be cut in the bottom side rails from either side. The length of pocket shall be equal to the width of container.

It is not necessary for the base of the fork-lift pockets to be the full width of the container but it shall be provided in the vicinity of each end of the fork pockets.

2.6.2 Areas for grappler arms and similar devices.

Areas for grappler arms or similar devices may be provided for all containers. Position of lifting areas, dimensions and structure of areas for grappler arms are shown in Fig. 2.6.2.

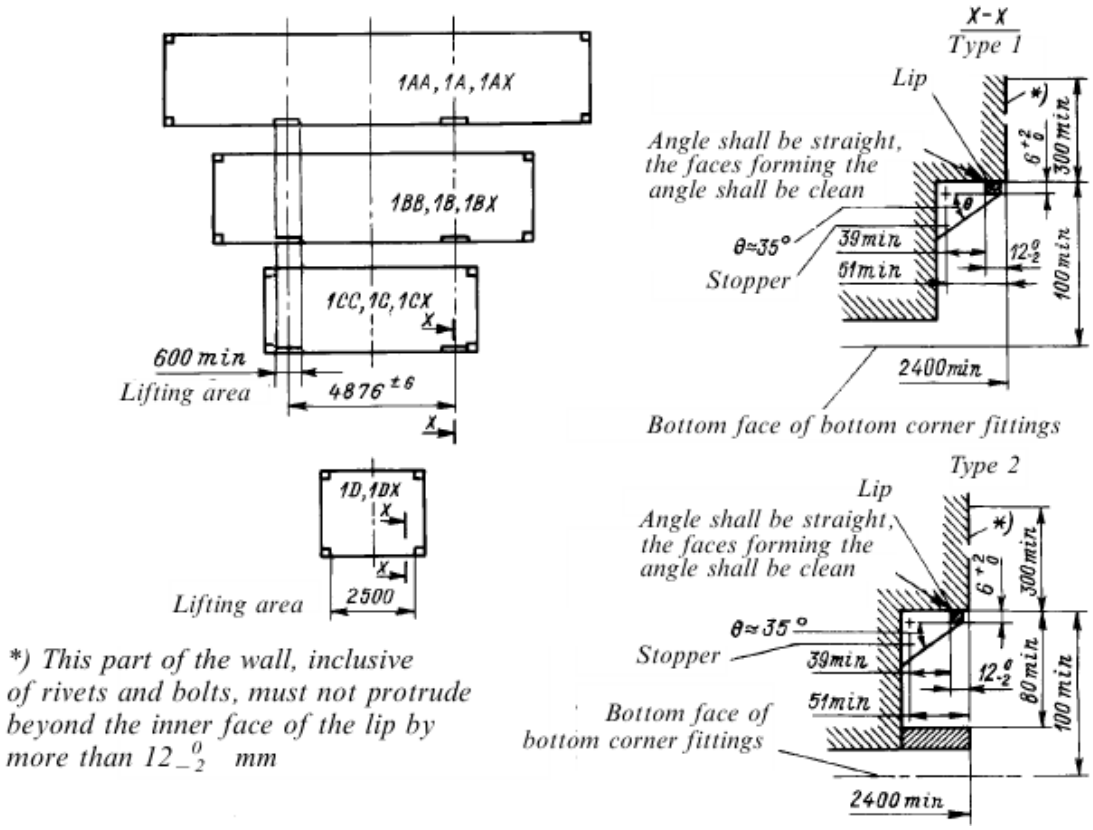

Fig. 2.6.2
Position of grappler arm lifting areas, dimensions, in mm, and design of grappler arm platforms

2.6.3 Gooseneck tunnel.

Gooseneck tunnel may be provided only for 1EEE, 1EE, 1AAA, 1AA, 1AX, 1BBB, 1BB and 1BX containers. For 1EEE and 1AAA containers "gooseneck" tunnel is mandatory. The tunnel structure may be formed by continuous tunnel side members given for the thick lines in Fig. 2.6.3, view A and having the specified internal dimensions or single components provided at the positions highlighted in solid color in Fig. 2.3.2.5.2-4.

Position and dimensions of the tunnel are shown in Fig. 2.6.3. The provision of tunnel shall not preclude fulfillment of requirements specified for the base structure under 2.3.

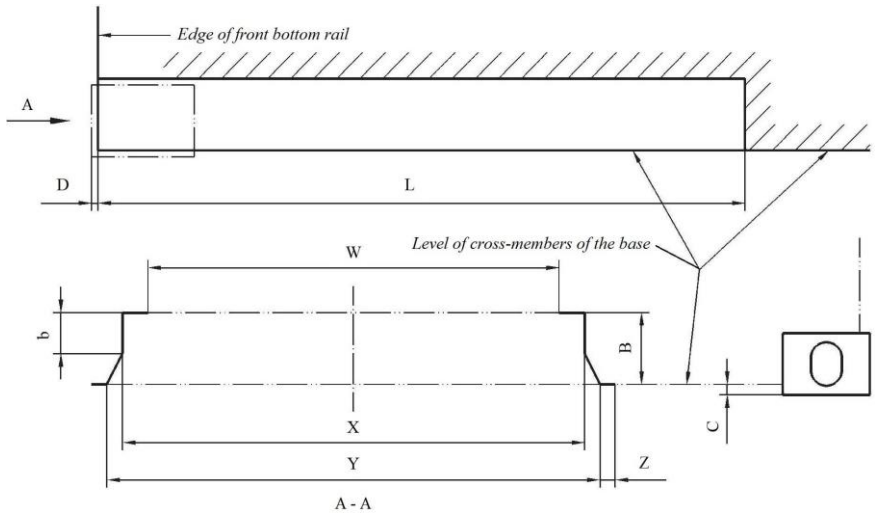

Fig. 2.6.3
Position and dimensions of gooseneck tunnel

Table 2.6.3

Length	*L*	3150 – 3500 (3150 – 4000 mm for IEEE, 1EE containers)
	D	6^{+1}_{-2}
Width	*W*	930 max
	X	1029^{+3}_{0}
	Z	25 min
	Y	1070 min
		1130 max
Height	*B*[1]	120^{0}_{-3}
	b	35 min
		70 max
	c	$12{,}5^{+5}_{-1{,}5}$
[1]The B tolerance shall be measured in the rear part of the tunnel on a length of about 600 mm.		

2.6.4 Cargo securing devices.

2.6.4.1 A cargo securing system is designed to restrain the movement of cargo resulting from dynamic forces induced during transportation.

N o t e . For general purpose containers, cargo securing devices are optional.

2.6.4.2 Cargo securing systems consist of:
shoring, or
cargo securing devices, or
a combination of both.

2.6.4.3 Cargo securing devices only shall be permanent fixtures to which lashings (such as ropes, straps, chains, cables, etc.) may be attached.

Such devices are not intended for any other purpose, for example handling or securing containers. They are either fixed, hinged or sliding eyes, rings or bars.

2.6.4.3.1 Anchor points are securing devices located in the base structure of the container.

2.6.4.3.2 Lashing points are securing devices located in any part of the container other than their base structure.

2.6.4.4 Cargo securing devices shall not infringe on the prescribed minimum internal dimensions of the container.

2.6.4.5 The typical number, N, of cargo securing devices shall be:

.1 for anchor points:

for 1EEE, 1EE, 1AAA, 1AA, 1A, 1AX containers, N = 16;

for 1BBB, 1BB, 1B, 1BX containers, N = 12;

for 1CCC, 1CC, 1C, 1CX containers, N = 10;

for 1D, 1DX containers, N = 8.

.2 for lashing points, N is unspecified.

2.6.4.6 Neither anchor points nor lashing points shall obstruct the door opening dimensions.

2.6.4.7 Cargo securing devices shall provide, on all sides, an unobstructed access to allow for:

passage of the through the aperture of cargo securing devices, or

attachment of restraint fixtures such as hooks, clips, shackles, etc.

2.6.4.8 Each anchor point as specified in 2.6.4.5.1 and 2.6.4.6 shall be designed and installed to provide a minimum rated load of 1000 kg applied in any direction.

2.6.4.9 Each lashing point as specified in 2.6.4.5.2 shall be designed and installed to provide a minimum rated load of 500 kg applied in any direction.

2.6.5 Automatic electronic identification (AEI) equipment.

In case of a container fitted with automatic electronic identification (AEI) equipment, this equipment shall comply with the requirements of ISO 10374.

2.6.6 Shoring slot system

2.6.6.1 A shoring slot system is designed to restrain the cargo from forcing the door open during sudden stops or tilts of the container during transportation. It also serves to restrain dislocated cargo to prevent it from spilling out of a container when the container's doors are opened.

2.6.6.2 Shoring slot systems consist of shoring slots and one or more cargo securing bars.

The shoring slot is a permanent fixture into which cargo securing bars or boards can be inserted and which will prevent cargo from placing loads in excess of the container's doors' design loads on the doors during sudden motion.

2.6.6.3 The shoring slots shall not infringe on the prescribed minimum internal dimensions of the container.

2.6.6.4 There shall be a set of two shoring slots in each container located just inward of the rear doors when the doors are in the closed position such that there is a zero clearance between inserted shoring bars and the doors' inner faces. The shoring slots shall be provided at each side wall, from floor to ceiling.

The shoring slot design shall provide for a clear container width of at least 2300 mm.

2.6.6.5 The door opening dimensions shall not be obstructed by the shoring slots.

2.6.6.6 The shoring slots shall be a minimum of 51 mm wide to allow for insertion of one or more shoring bars. The shoring slot shall be manufactured to support a $0{,}4Pg$ load applied in the longitudinal direction at any point in the shoring slot.

2.6.6.7 Supports shall be installed inside each shoring slot to support and hold the shoring bars in place horizontally. The spacing of the shoring supports, in each shoring slot, shall correspond horizontally to each other and be located at least every 380 mm from the floor up. For an eight foot container (a 1A, 1B or 1C container) there shall be a minimum of three supports located in each slot.

2.6.6.8 Support bars are not part of the container. Bars used should be able to withstand a minimum force of 1000 kgf in any direction.

3 MATERIALS AND WELDING

3.1 GENERAL

3.1.1 Materials used for the manufacture of containers shall meet the requirements of these Rules, approved by the Register technical documentation, and applicable national and/or international standards.

3.1.2 The materials used shall have assured properties (strength, toughness, weldability, resistance to corrosion failures etc.) to ensure failure-free performance of the structure under service conditions specified in the technical documentation approved by the Register.

3.1.3 When selecting composition of material for bearing structures of a container, it is required to take into account a range of working temperatures (ambient temperatures) likely to be encountered on the operational routes in areas with the most unfavourable conditions. In any case, the resistance of the material to brittle and corrosion failures within the temperature range from –40 °C to 50 °C shall be assured.

Other ranges of the operating temperatures, depending on the climatic version of construction specified in the design, may be adopted subject to agreement with the Register.

3.1.4 In the course of operation, the container owner is responsible for the use of container in the specified climatic zone.

3.1.5 Where stated in the appropriate parts of these Rules, the materials used for manufacture of containers shall be manufactured under the Register technical supervision.

3.1.6 Special requirements specifying mechanical characteristics and selection of the material depending on operating conditions, design type of the container and kind of the cargo carried are set forth in the appropriate parts of these Rules and IMDG Code.

3.1.7 Materials used in manufacture of containers shall not have a mutually adverse effect and shall be adequately insulated, if necessary.

3.2 MATERIALS FOR BEARING STRUCTURAL ELEMENTS

3.2.1 To manufacture bearing structural elements (rails, cross-members, including base, stands, tank container vessel supports, and pad eyes), carbon steel, carbon-manganese steel, silicon-manganese steel and low-alloy steel complying with the requirements of Table 3.2.3 shall be used.

3.2.2 Chemical composition, heat treatment and weldability of the materials shall meet the requirements of valid national and/or international standards as well as correspond to the operation conditions determined when designing a container.

3.2.3 Mechanical properties shall comply with the requirements specified in Table 3.2.3.

Table 3.2.3

Strength grade	Yield stress R_e, MPa, min	Tensile strength R_m, MPa, min	Elongation, %, min	Average impact energy of longitudinal specimens KV_L at the minimum working temperature, J, min	Average impact energy of transverse specimens KV_T at the minimum working temperature, J, min
265	265	430	21	27	20
295	295	430	21	29	21
315	315	450	21	31	22
345	345	490	21	33	23
355	355	490	20	34	24
375	375	510	20	37	25
390	390	510	19	39	26
Note. Impact tests of material of 6 mm in thickness and less are not required.					

3.2.4 When selecting material for the bearing structure elements, the requirements set out in 3.1.3 shall be considered to provide an assured impact energy value at the working temperature that shall be not lower than the average value specified in Table 3.2.3 for each strength grade obtained when testing three standard cross-section specimens measuring 10×10 mm with a sharp V-notch to be cut parallel to the final direction of rolling of the material used. If the thicknesses of the material under test are less than 10 mm, the following average values of impact energy are taken:

for specimens with dimensions of 10×7,5 mm –$E_{7,5} = 5E/6$;

for specimens with dimensions of 10×5,0 mm –$E_{5,0} = 2E/3$,

where E is the average value of impact energy obtained in standard specimens with dimensions of 10×10 mm.

Notes: 1. Sampling shall be carried out in compliance with 3.2.5, Part XIII "Materials" of the Rules for the Classification and Construction of Sea-Going Ships.

2. Sampling and material tests shall be carried out in compliance with Section 2, Part XIII "Materials" of the Rules for the Classification and Construction of Sea-Going Ships.

3.2.5 Use of other materials for manufacture of the container bearing structure as well as the testing scope thereof are subject to special consideration by the Register.

3.2.6 Additional requirements for materials of the load bearing structure of offshore containers are given in Part VII "Offshore Containers" of these Rules.

3.3 MATERIALS FOR TANK CONTAINER VESSELS

3.3.1 Materials used in the manufacture of tank container vessels, piping, manholes and their covers, flanges, fittings, safety devices along with the materials used for their attachment, shall withstand the temperatures, the pressure produced by the goods carried and their vapours under the operating conditions, and be immune to attack by the goods transported and their vapours, with regard to the corrosion allowances (if applicable), or shall be passivated or neutralized by chemical reaction, or lined with corrosion-resistant material.

3.3.2 Depending on the type of tank container, kind of cargo carried and operating conditions, use may be made of carbon-manganese steel, silicon-manganese steel, alloy steel, acid-resistant steel, austenitic steel, aluminum alloys.

3.3.3 Chemical composition of the materials, their mechanical properties, scope and methods of testing shall meet the requirements of valid national and/or international standards

applied to rolled steel products for pressure vessels or other materials indicated in the Register approved technical documentation, but the testing scope shall comply with the requirements of national and/or international standards applied to rolled steel products for pressure vessels

3.3.4 The materials with thickness of 6 mm shall be impact tested with V-type notch at minimum operating temperature of the tank container. The minimum value of impact energy obtained during testing of each specimen shall not be less than 27 J for transverse specimens and 41 J for longitudinal specimens.

N o t e s : 1. Impact tests for austenitic steels shall not be performed unless it is specified in the technical documentation.

2. The dimensions of test specimens and the impact test procedure shall comply with 3.2.8

3.3.5 Value of yield strength of the material made of fine-grain steel shall not exceed 460 MPa, and a guaranteed value of upper limit of tensile strength shall not exceed 725 MPa in accordance with technical requirements for materials.

N o t e . Fine grain steel means steel which has a ferritic grain size of 6 or finer when determined in accordance with ASTM E 112 or as defined in EN 10028-3.

3.3.6 Use of material with R_e/R_m ratio of more than 0,85 is not allowed for manufacture of welded vessels. To define this ratio, values of R_e and R_m indicated in the certificate for material shall be used.

Steels used in the manufacture of vessels shall have an elongation at fracture, in %, of not less than $10000/R_m$ with an absolute minimum of 16 % for fine grain steels and 20 % for other steels.

Aluminium and aluminium alloys used in the manufacture of vessels shall have an elongation at fracture, in %, of not less than $10000/6R_m$ with an absolute minimum of 12 %.

3.4 WOOD

3.4.1 Sawn timber shall be of sufficient strength, with no sap, cracks or loose knots, and with moisture content not over 18 %.

3.4.2 The veneers of plywood shall be glued together throughout by efficient waterproof adhesives resistant to ageing affects so that laminations will not occur if wetted.

3.4.3 Preserving means used for treatment and impregnation of timber shall have no adverse effect on the cargoes carried in containers.

3.5 PLASTICS

3.5.1 The plastics used for the construction of containers shall be specially considered by the Register in each particular case.

3.6 SEALING MATERIALS

3.6.1 Rubber and other sealing materials used for the sealing of doors shall be elastic, durable and stable to mechanical wear under changes of ambient temperature encountered in service conditions of a container, and shall be also resistant to deteriorative action of sea water.

3.7 WELDING

3.7.1 Requirements for welding processes, welders and welding consumables are specified in Table 3.7.1.

Table 3.7.1

Types[1] of containers and container products	Welding processes		Сварщики		Welding consumables
	Type of structure				
	Bearing	Secondary	Bearing	Secondary	
General freight containers, open top containers, non-pressurized solid bulk containers, thermal containers, products for containers	СОТПС[2] or WPS+ST	СОТПС[2] or WPS+ST	СДС[3] or WPQ[4,5]	СДС[3] or WPQ[5]	СОСМ[6]+МС or С[7]
Platform containers, platform-based containers, named-cargo containers, containers capable of being folded	СОТПС[2]		СДС[3]		
Tank containers of all types, offshore containers of all type. Corner and intermediate fittings, shell (vessel) of tank containers, tank heads, tank shells, lifting set for offshore containers and it components				СДС[3]	

[1] Welding requirements for various types of containers, including non-ISO series 1 containers, and products for containers that are not listed in this table are subject to separate consideration by the RS and depend on the thicknesses used.
[2] Approval of welding processes shall be carried out in accordance with the requirements of Sections 6 and 7, Part III "Technical Supervision during the Manufacture of Materials" of the Rules for Technical Supervision during the Construction of Ships and the Manufacture of Materials and Products for Ships, as applicable to containers.
[3] Certification of welders shall be carried out in accordance with the requirements of Section 4, Part III "Technical Supervision during the Manufacture of Materials" of the Rules for Technical Supervision during the Construction of Ships and the Manufacture of Materials and Products for Ships.
[4] RS reserves the right to require confirmation of certification. Such validation may include re-testing of knowledge, pre-manufacturing weld test specimens, additional non-destructive testing and/or welding production testing.
[5] Welder performance qualification (WPQ) shall be issued more than a year before and shall provide information that the welders have practical experience in performing welding work within the last 6 months.
[6] Approval of welding consumables shall be carried out in accordance with the requirements of Section 4, Part XIV "Welding" of the Rules for the Classification and Construction of Sea-Going Ships.
[7] For stainless steel welding, it is allowed to use a welding consumable with a type certificate 3.1 in accordance with EN 10204. The welding consumable shall comply with the welding technologies used and shall have welding and technological characteristics that ensure the properties of welded joints within the values established by the requirements of normative and/or technical documentation.

Примечания: 1. WPQ — a document issued to a welder by a national welding institution or an authorized state body confirming the welder's qualifications.
2. ST — with further strength testing of the prototype of the container under RS technical supervision with positive results.
3. МС — document issued by the manufacturer, which declares the conformity of the material to the RS requirements.
4. С — Certificate (form 6.5.30).
5. СДС — RS Certificate on the admission of the welder.
6. СОСМ — RS Certificate on the approval of the welding material.
7. СОТПС — RS Certificate on approval of technological welding processes.
8. СПС — specification of the welding process developed by a specialist of the firm with the appropriate qualifications and approved by the head or technical head of the organization carrying out welding work.

4 MARKING

4.1 CSC PLATE

4.1.1 The CSC Plate shall be permanently affixed to every container of the approved design type-series or to a container approved individually.

4.1.2 The CSC Plate shall bear the following particulars in the English language (refer to Fig. 4.1.2):

CSC SAFETY APPROVAL

1	…				
2	DATE MANUFACTURED:	…			
3	IDENTIFICATION No.:	…			
4	MAXIMUM OPERATING GROSS MASS:	…	kg	…	lb
5	ALLOWABLE STACKING LOAD FOR 1,8g:	…	kg	…	lb
6	TRANSVERSE RACKING TEST FORCE:	…			newtons
7	…				
8	…				
9					

≥ 100 mm

≥ 200 mm

Fig. 4.1.2
The CSC Plate

N o t e s : 1. Number of Certificate of Approval issued by the Register.

2. The date of manufacture is the month and year of manufacture.

3. The identification number is the number assigned to the container by the manufacturer (manufacturer's serial number).

4. Maximum operating gross mass R is the maximum allowable gross mass R.

5. Allowable stacking load at acceleration for $1{,}8g$.

6. Transverse racking test force is transverse racking test load.

7. End wall strength is indicated on the plate only if the end walls are designed to withstand a force of less or greater than $0{,}4Pg$ (example of particulars: END-WALL STRENGTH $0{,}6P$).

8. Side wall strength is indicated on the plate only if the side walls are designed to withstand a force of less or greater than $0{,}6Pg$ (example of particulars: SIDE-WALL STRENGTH $0{,}5P$).

9. A blank space for indication of examination dates is for date (month and year) of the first special survey after the container manufacture, as well as the dates (month and year) of subsequent surveys if plate is used for this purpose.

10. Allowable one door off stacking load to be indicated on plate only if the container is designed and tested for one door off operation. The marking shall show – "ALLOWABLE STACKING LOAD ONE DOOR OFF FOR 1,8g (kg lb)". This marking shall be displayed immediately near the words "ALLOWABLE STACKING LOAD FOR 1,8g".

11. One door off transverse racking test force to be indicated on the plate only if the container is designed and tested for one door off operation. The marking shall show – "TRANSVERSE RACKING TEST FORCE ONE DOOR OFF (newtons)". This marking shall be displayed immediately near the words "TRANSVERSE RACKING TEST FORCE".

12. Permissible mass(masses) for various stacking modes at $1{,}8g$ the container is designed for, is(are) additionally indicated for IEEE and 1EE containers.

4.1.3 The CSC Plate shall be a plate of rectangular shape measuring at least 200×100 mm. The height of letters for the title (refer to Fig. 4.1.2) of the Plate shall be at least 8 mm. The height of all other letters and figures shall be not less than 5 mm.

The title and particulars of the CSC Plate shall be stamped into, embossed on, or indicated on its surface in any other permanent and legible way.

Any letters and figures placed on the plate to those already available shall be of a minimum height 5 mm, stamped into, embossed on, or indicated in any other permanent and legible way.

4.1.4 The CSC Plate shall be made of durable, noncorrosive and fire-proof material providing legible impression of the Register brand and survey date.

4.1.5 The CSC Plate shall be permanently affixed to the container at a readily visible place where it would not be easily damaged or unauthorizedly removed.

4.1.6 Consolidated Data Plate (refer to Fig. 4.1.6) bearing, as a minimum, particulars in accordance with 4.1.2 of this Section, 4.3.1 of Part IV "Tank Containers" of these Rules and 3.1.2 of the Rules for the Approval of Containers for the Transportation of Goods Under Customs Seal, as well as particulars in accordance with other international and national requirements may be used instead of several individual plates.

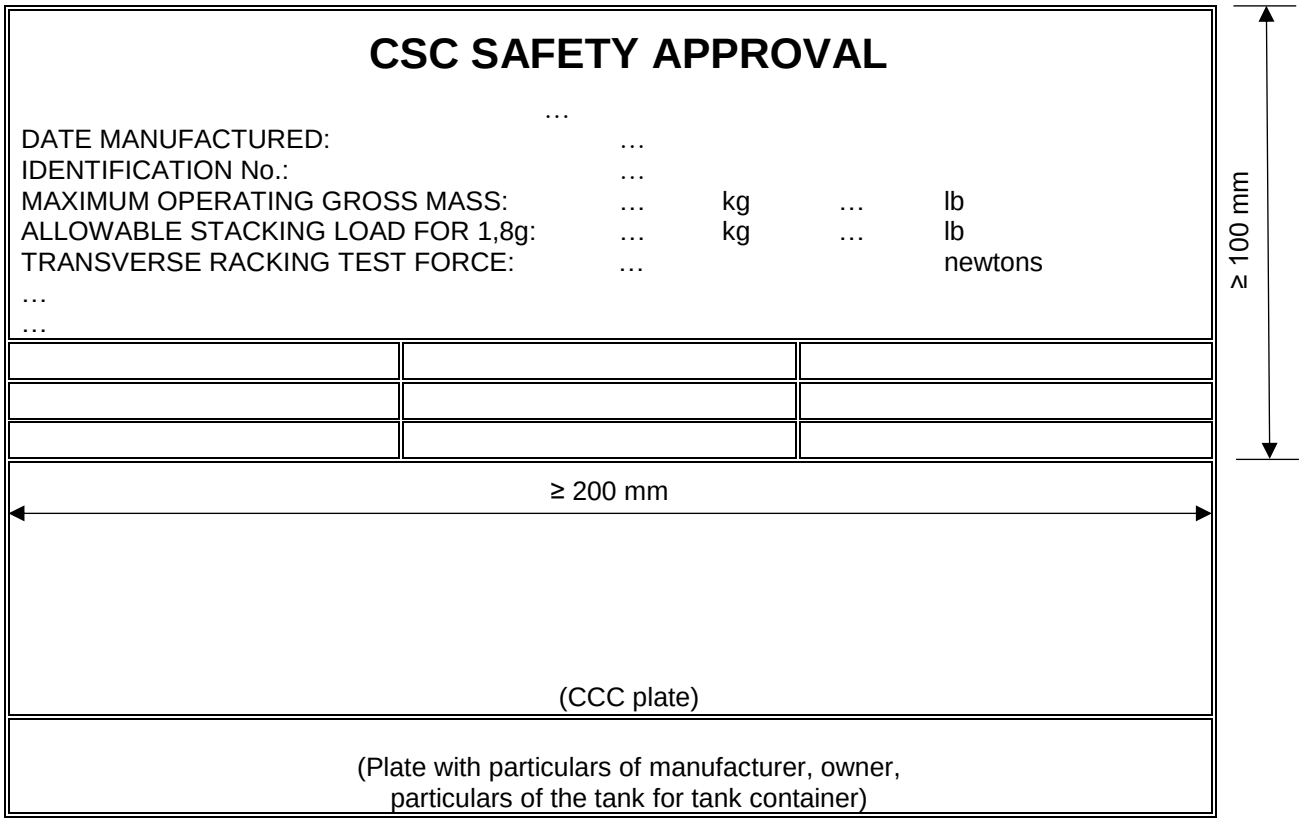

Fig. 4.1.6
Consolidated Data Plate

4.2 MANDATORY MARKING

4.2.1 In addition to the CSC Plate, the container, manufactured in accordance with the documentation approved by the Register and under the Register technical supervision, shall bear the Register emblem, as well as, as a minimum, the following symbols and signs:

.1 the code of container type and size in compliance with ISO 6346;

.2 the warning symbol of the risk of electric shock (for the containers fitted with ladders);

.3 the code of the owner, the number, given by the owner and reference number;

.4 gross mass and tare mass of the container. The gross mass shall correspond to that indicated on the CSC Plate and the tare mass – to the actual mass obtained by weighing of the prototype container, unless otherwise stated in these Rules;

.5 symbols of the container height and alternate black and yellow stripes in the area of top corner fittings (for the containers over 2,6 m in height);

.6 marking containing the "ACEP" index and the program registration number, assigned by the Register, if the container is operated under the Approved Continuous Examination Program;

.7 manufacturer's serial number in the right bottom back corner fitting.

4.2.2 The inscriptions indicated in 4.2.1.1 — 4.2.1.5 shall be painted or applied by means of material with a glue film in a colour well contrasting with the painting of a container. The letters and figures shall be not less than 100 mm in height and not less than 10 mm in width, except that the gross mass and tare mass shall have the figures of not less than 50 mm in height.

Location of inscriptions and signs as well as the size of signs shall comply with the requirements of ISO 6346.

4.2.3 If a container is fitted with special arrangements intended for use solely when the container is empty (e.g. fork lift pockets used for lifting and transporting an empty container) or if the container is designed for the lesser stacking loads than those specified in Section 3, Part II "General Freight Containers", or if special methods of handling are required for the container, then relevant inscriptions and signs notifying of these restrictions shall be applied.

The inscriptions shall be made in the English language; inscriptions in other languages are also permitted.

4.2.4 For special-purpose containers, requirements for the additional marking are, moreover, set forth in the relevant parts of these Rules.

5 FITTINGS

5.1 GENERAL

5.1.1 Application.

5.1.1.1 The requirements of this Section apply to corner and intermediate fittings used on containers, as well as items subject to RS technical supervision.

5.1.1.2 Fittings other than those specified in this section are subject to separate consideration by RS.

5.1.2 Technical documentation.

5.1.2.1 The scope of the technical documentation submitted for consideration as well as the forms for confirming the compliance of the technical documentation with the RS requirements, are specified in Table 5.1.2.1 and may be changed upon the agreement with RS.

Table 5.1.2.1

№	Document name		Set[1]	Review result[2]
1	Technical conditions or technical specification		I	A
2	Program of:			
	.1	prototype testing	I	A
	.2	series testing	II	A
3	Corner and/or intermediate fitting		I	A
4	Marking drawing		II	A

[1] In case of submission of technical documentation by parts, documents marked with the number (I) should be submitted with the first part. Documents marked with the number (II) may be submitted with the second and subsequent parts. The volume of technical documentation provided with the first part may be changed upon the agreement with RS.
[2] A — approved; Ag — agreed; FI — for information. If necessary, the documents may be approved and/or agreed subject to the implementation of the comments of the RS letter.

Note. Documents specified in this table may not be provided upon the agreement with RS, if all necessary information is contained in other documents included in the set of technical documentation.

5.1.3 Explanations.

Fitting design elements are indicated in Fig. 5.1.3.

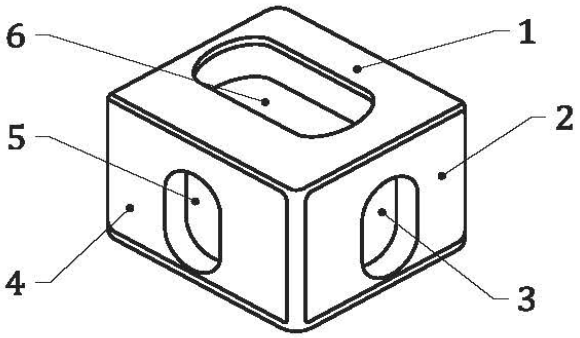

Upper corner fitting

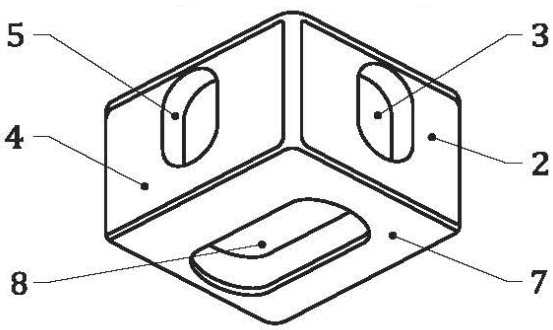

Bottom corner fitting

Fig. 5.1.3 Corner fittings
(*1* — top wall; *2* — outer end wall; *3* — end aperture; *4* — outer side wall; *5* — side aperture; *6*, *8* — base aperture; *7* — bottom wall)

5.2 DIMENSIONS

5.2.1 The dimensions and tolerances of fittings for ISO series 1 containers shall comply applicable requirements of ISO 1161. These parameters are given in Figs. 5.2.1-1 — 5.2.1-4.

N o t e . The value of the thickness of the lower face of the upper fitting, as well as the upper face of the lower fitting, may be reduced from 11 mm to 9 mm, provided that such fittings pass the tests specified in 5.6 with satisfactory results.

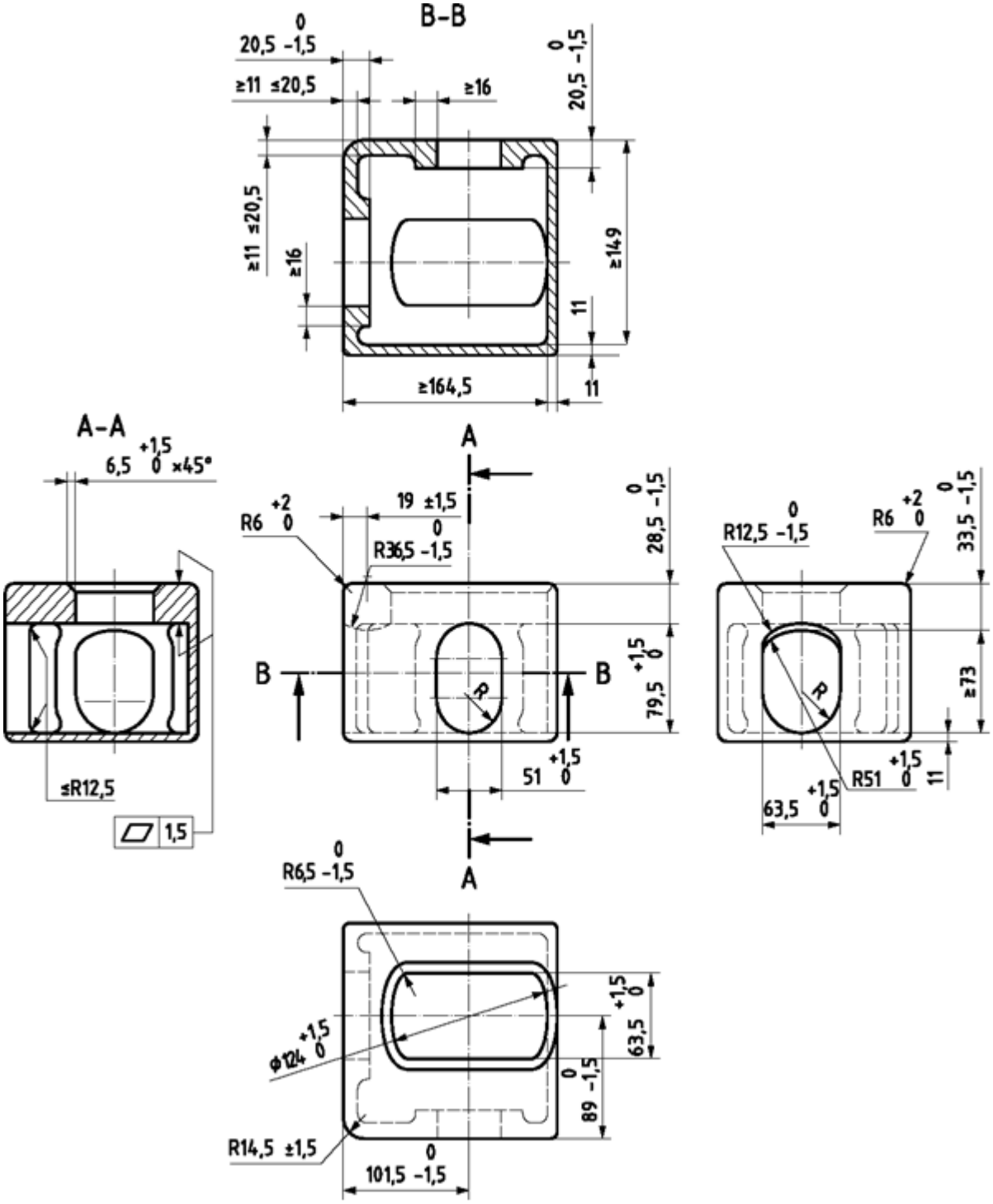

Fig. 5.2.1-1
Top corner fitting, in mm

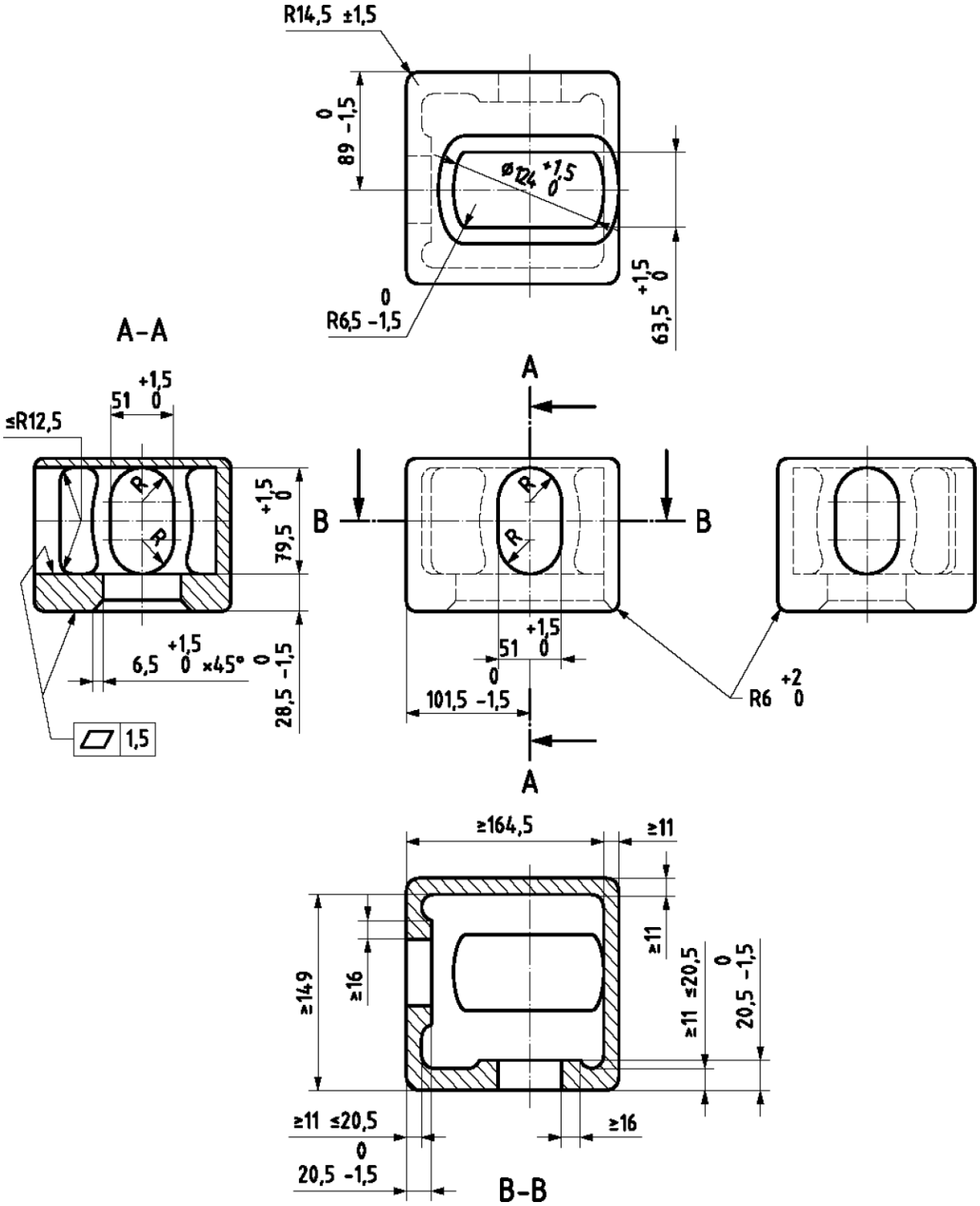

Fig. 5.2.1-2
Bottom corner fitting, in mm

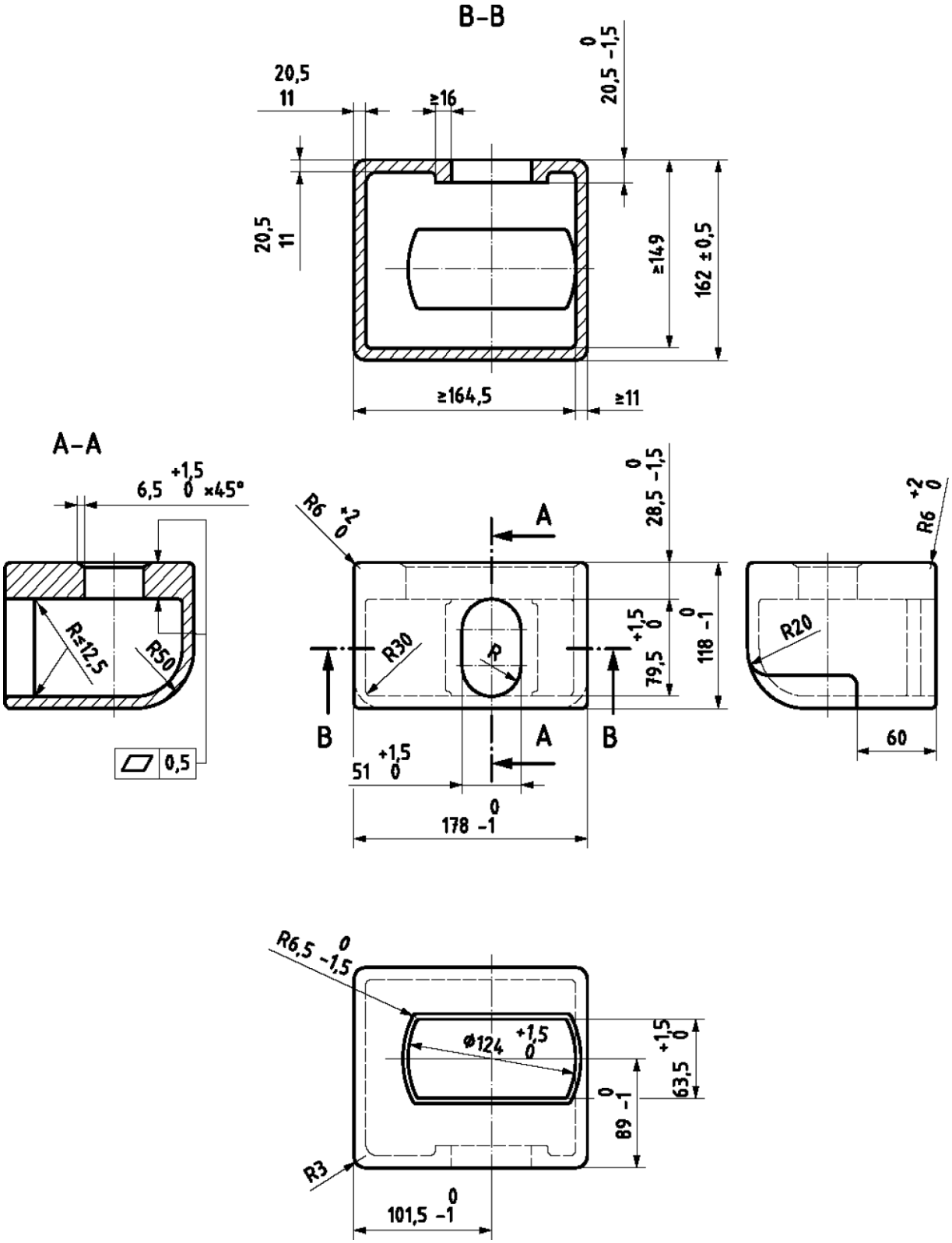

Fig. 5.2.1-3
Top intermediate fitting, in mm

(Required surfaces: top surface, outer side surface, outer surface directed to the nearest container end)

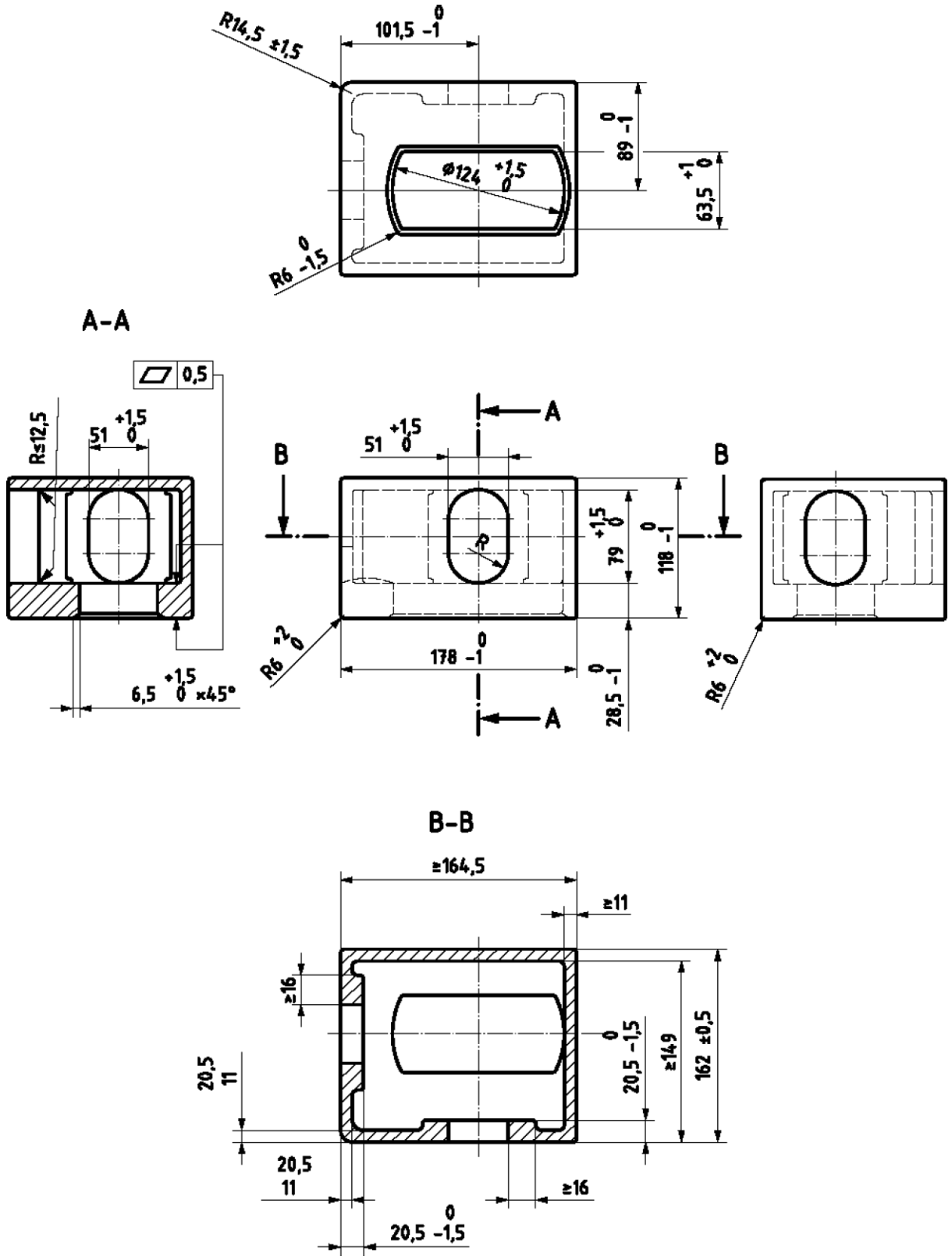

Fig. 5.2.1-4
Bottom intermediate fitting, mm

(Required surfaces: bottom surface, outer side surface, outer surface directed to the nearest container end)

5.2.2 Where the dimensions are not specified for inner and outer edges of apertures, these edges shall be given a radius of: $3^{0}_{-1,5}$ mm.

5.2.3 At the junction of the two 6 mm outside edge radii with the 14,5 mm edge radius, the corner shall be rounded by blending the radiused edges, removing minimum amounts of material from the flat outer faces and walls.

5.2.4 Where a corner or intermediate fitting has an optional inner side wall and is made to the minimum dimension of 149 mm, the junction of the mandatory horizontal face to the optional inner side wall may be provided with a radius not exceeding 5,5 mm.

If a greater radius is required, the 149 mm dimension shall be increased accordingly.

5.3 MATERIALS

5.3.1 When selecting a fitting material for chemical composition, it is required to take into account a range of working temperatures (ambient temperatures) likely to be encountered on the operational routes with the most unfavourable conditions. In any case, the resistance of the material to brittle and corrosion failures within the temperature range from – 40 °C to 50 °C shall be assured.

Other ranges of the operating temperatures, may be adopted subject to agreement with the RS.

5.3.2 The chemical composition of the resulting material shall be such as to ensure guaranteed weldability.

5.3.3 The mechanical properties of the castings material after thermal treatment according to procedures shall comply with the requirements of Table 5.3.3.

When manufactured by casting, test specimens shall be taken either from the cast corner fitting or from a separately cast sample (ladle sample) that has undergone the same heat treatment.

Table 5.3.3

Mechanical properties

Yield stress R_e, MPa, min	Tensile strength R_m, MPa, min	Elongation A_5, %, min	Reduction of area Z, %, min	Impact energy KV[1], J, min, at temperature, °C	
				-20	-40[2]
275	480	25	40	27	21

[1] Average value obtained at testing of three sharp-notch specimens in accordance with 2.2.3, Part XIII "Materials" of the Rules for Classification and Construction of Sea-Going Ships. The value of impact energy determined on one test specimen may be assumed less than that given one in the Table, but in any case it shall not be less than 70 % of this value.

[2] Test at a lower temperature may be carried out at the request of the customer with due regard for the climatic design version of the product, with this significant impact value at lower temperatures shall not be less than 21 J.

5.4 MANUFACTURING

5.4.1 Fittings shall be designed and manufactured in accordance with the applicable requirements of valid ISO 1161 and ISO 1496 series standards so that they can withstand the loads that occur when operating within a given temperature range.

5.4.2 Fittings may be manufactured by casting or other technique. The same technique may be applied for manufacture of built-up fittings with the use of welding, namely:

.1 fittings completely welded from individual elements —for side and end faces;

.2 cast or stamped fittings with weldable plate (additional wall which develops box-shaped fitting as per ISO 1161).

5.4.3 Casting fittings shall be manufactured in electric furnaces or oxygen-converter or other process and steel shall be killed.

5.4.4 Fittings shall be treated according to conditions given in the agreed specification taking into consideration requirements of 3.8.4, Part XIII "Materials" of the Rules for the Classification and Construction of Sea-Going Ships.

5.5 DEFECTS AND NON-DESTRUCTIVE TESTING

5.5.1 Visual inspection shall be carried out on the external and internal surfaces of each fitting.

5.5.2 Non-destructive testing (eg. RT or UT) shall be performed on one fitting from each lot, but not more than from a lot of 400 fittings, in accordance with international and/or national standards. If defects are found, non-destructive testing of another 5 % of the fittings from the lot shall be carried out. If defects are found on at least one more fitting in an additionally inspected lot, the entire lot must be checked. All defective fittings beyond repair must be destroyed.

5.5.3 The following defects are not allowed:

.1 cracks;

.2 casting defects located in the areas of openings for cask fixing devices in areas of stress initiation due to loads during cask operation;

.3 a single internal defect with a diameter of more than 5 mm;

.4 internal defects located on the side with an opening, with a total area on one side of more than 100 mm^2;

.5 internal defects located on the side without a hole, with a total area on one side of more than 200 mm^2.

5.5.4 The following defects are allowed:

.1 separate surface defects of castings not subject to machining, not more than 3 mm in diameter, not more than 1.5 mm deep, but not more than 15 defects per fitting;

.2 any casting defects in castings subject to machining, not exceeding the depth of the machining allowance.

5.5.5 Defects exceeding the limits specified in 5.5.4 may be eliminated by one of the following methods.

5.5.5.1 Stripping.

Minor defects are subject to removal by grinding, provided that the depth of grinding shall not exceed the allowable minus tolerances.

5.5.5.2 Welding.

For defects that cannot be removed by grinding alone, welding with preliminary cleaning of defective areas shall be used, provided that the depth of the defects does not exceed 40 % of the fitting wall thickness. When repairing fittings by welding, the following requirements shall be met:

.1 welding shall be carried out taking into account the requirements of Table 3.7.1;

.2 preheating before welding shall be provided if the ambient temperature is below 5 °C or moisture is present at the welding site;

.3 after repair, all cast fittings shall be subjected to heat treatment using regimes agreed with RS;

.4 welded areas shall be cleaned and checked for defects using one of the non-destructive testing methods specified in 5.5.2.

5.6 TESTING

5.6.1 General.

5.6.1.1 Head samples of fittings shall be tested in accordance with 5.6.2 — 5.6.13.

5.6.1.2 For series production, 2 % of each batch shall be tested in accordance with 5.6.3 — 5.6.13, and the test specified in 5.6.2 shall be carried out.

If the manufacture has a functioning quality control system, then during serial production, the scope of tests, in agreement with RS, can be reduced to that specified in 5.6.2.

5.6.1.3 Tests shall be carried out on samples that have undergone heat treatment.

5.6.1.4 A dimensional check shall be carried out on each fitting tested.

5.6.2 Mechanical tests.

5.6.2.1 For each heat, the mechanical characteristics indicated in Table 5.3.3 shall be confirmed.

For welded fittings, each sheet of material used shall be tested and conformance confirmed.

5.6.3 Top fitting stacking test.

5.6.3.1 The test load (942 kN + 10%) shall be applied to the top wall of the fitting (refer to Fig. 5.6.3.1).

The load shall be applied through the pad, the bearing surface of which shall correspond in area to the bottom edge of the fitting. The liner shall be offset 38 mm from the outer end face and 25,4 mm from the outer side face of the fitting. The line of action of the test load shall be parallel to the sides and ends of the fitting.

The load shall be applied for a minimum of 2 min.

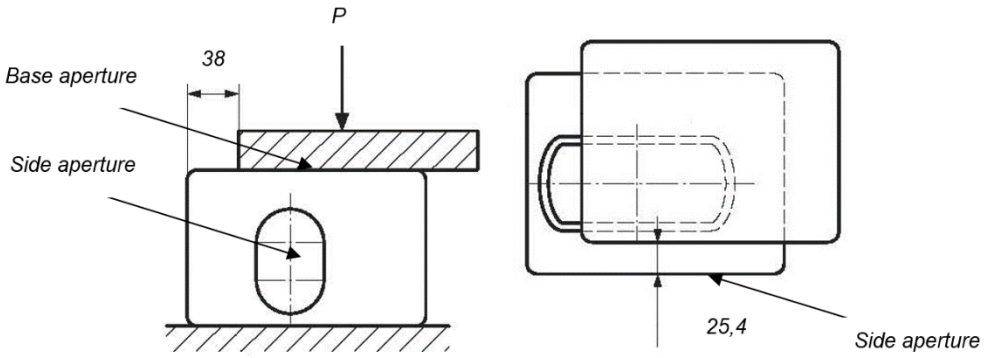

Fig. 5.6.3.1
Top fitting stacking test, mm

5.6.4 Top intermediate fitting stacking test

5.6.4.1 The test load (423 kN + 10%) shall be applied to the top wall of the fitting (refer to Fig. 5.6.3.1).

The load shall be applied through the pad, the bearing surface of which shall correspond in area to the bottom edge of the fitting. The pad shall be offset 38 mm from the outer end face and 25,4 mm from the outer side face of the fitting, and the line of application of the test load shall be parallel to the sides and ends of the fitting.

The load shall be applied for a minimum of 2 min.

5.6.5 Bottom fitting stacking test

5.6.5.1 The test load (1200 kN + 10%) shall be applied to the bottom wall of the fitting (refer to Fig. 5.6.5.1).

The load shall be applied through the pad, the bearing surface of which shall correspond in area to the bottom surface of the fitting. The line of action of the test load shall be parallel to the sides and ends of the fitting.

The load shall be applied for a minimum of 2 min.

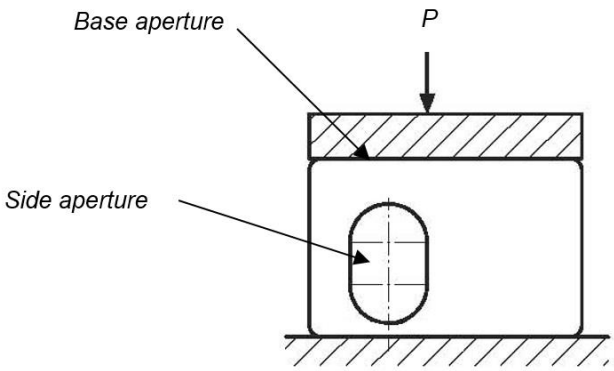

Fig. 5.6.5.1
Bottom fitting stacking test (no offset)

5.6.5.2 The test load (942 kN + 10%) shall be applied to the bottom wall of the fitting (refer to Fig. 5.6.3.1).

The load shall be applied through the pad, the bearing surface of which shall correspond in area to the bottom edge of the fitting. The pad shall be offset 38 mm from the outer end face and 25,4 mm from the outer side face of the fitting, and the line of application of the test load shall be parallel to the sides and ends of the fitting.

The load shall be applied for a minimum of 2 min.

N o t e . Fittings not marked so as to differentiate them as being either top or bottom fittings shall be subjected to the bottom fitting stacking test.

5.6.6 Bottom intermediate fitting stacking test

5.6.6.1 The test load (560 kN + 10 %) shall be applied to the bottom wall of the fitting (refer to Fig. 5.6.5.1).

The load shall be applied through the pad, the bearing surface of which shall correspond in area to the bottom surface of the fitting. The line of action of the test load shall be parallel to the sides and ends of the fitting.

The load shall be applied for a minimum of 2 min.

N o t e . Fittings not marked so as to differentiate them as being either top or bottom intermediate fittings shall be subjected to the bottom intermediate fitting stacking test.

5.6.7 Twistlock lifting test

5.6.7.1 The top and bottom fittings shall be tested.

A test load (not less than 250 kN) shall be applied to the base aperture through a test tool, corresponding in terms of seats to the twistlocks for containers (refer to Fig. 5.6.7.1).

The line of action of the test load shall be parallel to the sides and ends of the fitting. The force shall be distributed over at least 800 mm^2.

The load shall be applied for a minimum of 2 min.

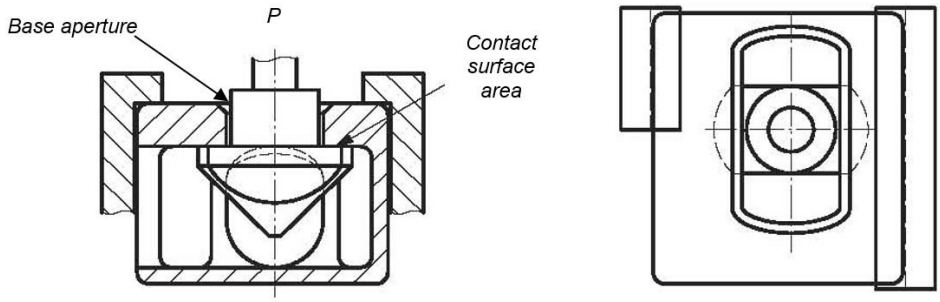

Fig. 5.6.7.1
Twistlock lifting test

5.6.8 Cargo hook lifting test.

5.6.8.1 The top fittings shall be tested.

A test load (not less than 194 kN) shall be applied through the end aperture in the direction of the base aperture.

The line of action of the test load shall be parallel to the sides and ends of the fitting.

The load shall be applied for a minimum of 2 min.

5.6.9 Cargo hook lifting test 2.

5.6.9.1 The bottom fittings shall be tested (refer to Fig. 5.6.9.1).

The test load (300 kN) shall be applied through the side aperture at an angle of 30° to the horizontal.

The line of action of the test load shall be parallel to the sides and ends of the fitting and be no more than 38 mm away from it.

The load shall be applied for a minimum of 2 min.

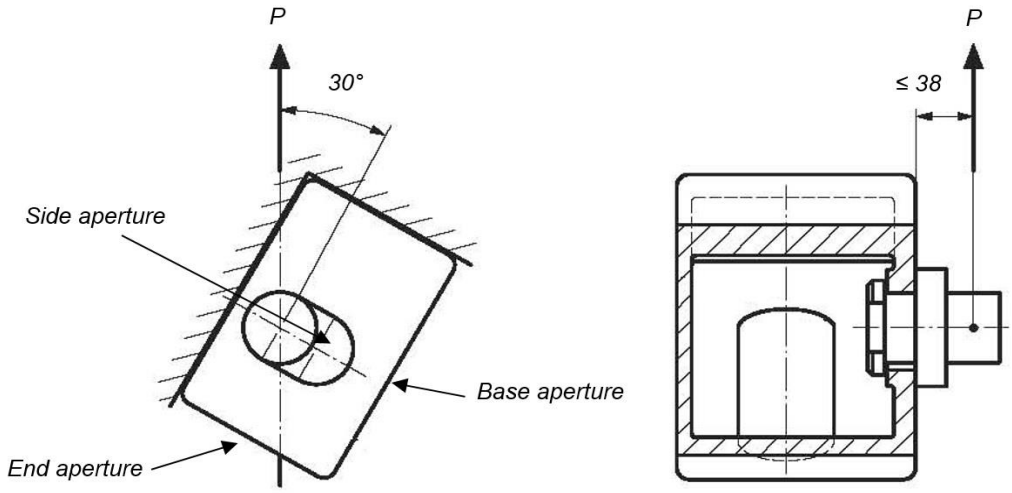

Fig. 5.6.9.1
Cargo hook lifting test 2, in mm

5.6.10 Impact test.

5.6.10.1 The top and bottom fittings shall be tested.

The test load (150 kN) shall be applied to the top and bottom walls of the fitting through a 25 mm x 6 mm test pad (with a 150 mm^2 bearing surface) which shall be centered between the base aperture and the blank side wall of the fitting (refer to Fig. 5.6.10.1). The depth of the indentation on the surface to be tested shall not exceed 0,3 mm.

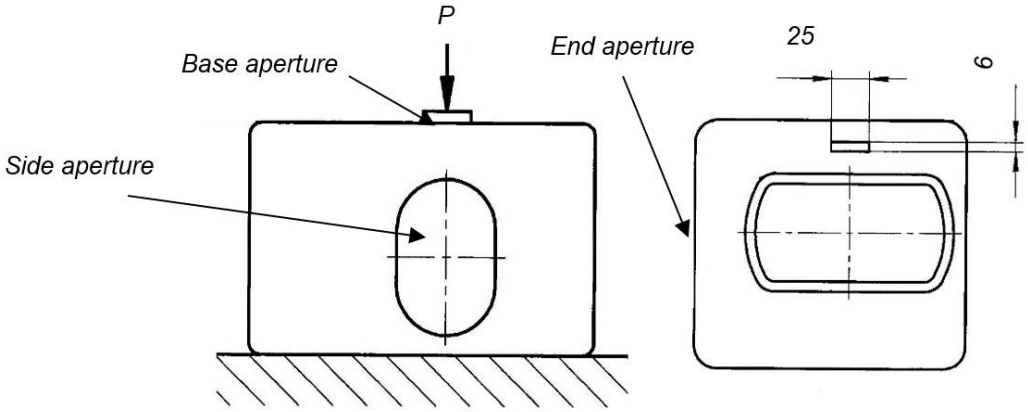

Fig. 5.6.10.1
Impact test, in mm

5.6.11 Lashing bar test.

5.6.11.1 The lower corner fittings shall be tested.

The test load (300 kN) shall be applied through the end aperture vertically towards the base aperture through a test tool similar in design to lashing (refer to Fig. 5.6.11.1).

The line of action of the load shall be parallel to the side and end sides of the fitting and be at a distance of no more than 38 mm from it.

The load shall be applied for a minimum of 2 min.

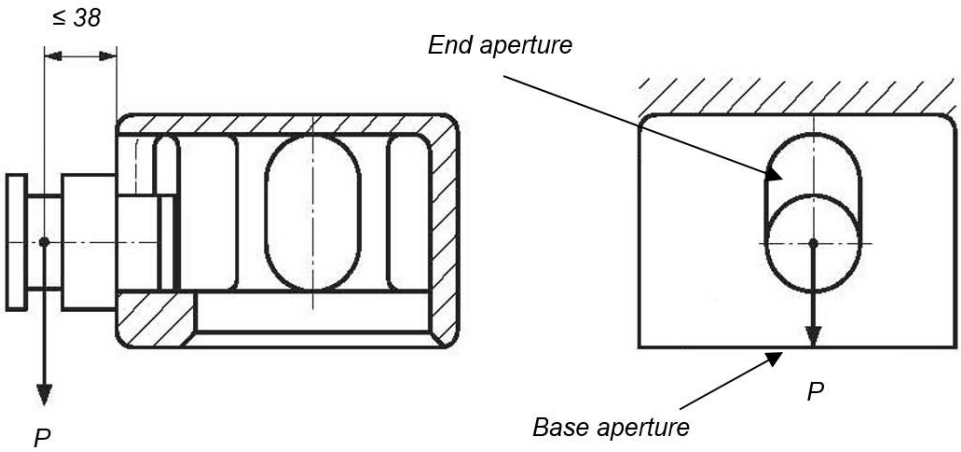

Fig. 5.6.11.1
Lashing bar test, in mm

5.6.12 Misgather test.

5.6.12.1 The top and bottom fittings shall be tested.

The test load (150 kN) shall be applied to the top and bottom walls of the fittings through a 25 mm x 6 mm test pad, which shall be placed on the edge of the base aperture, from the side closest to the side surface of the fitting (refer to Fig. 5.6.12.1).

The load shall be applied for a minimum of 2 min.

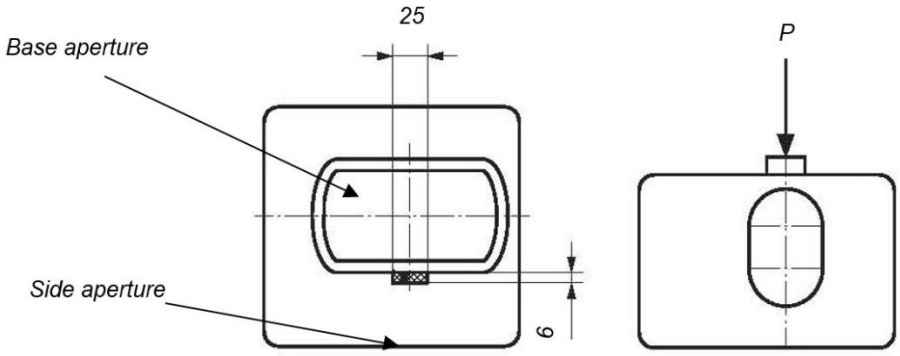

Рис. 5.6.12.1
Misgather test, mm

5.6.13 Rail securing test

5.6.13.1 The bottom fittings shall be tested.

The test load (360 kN) shall be applied longitudinally to the base aperture of the fitting, first in the direction of the end aperture, then in the direction opposite to the end aperture, through a test tool corresponding to the standard container attachment point on the railway platform.

The load shall be applied for a minimum of 2 min.

5.7 MARKING

5.7.1 Markings shall be located at positions where they are clearly visible after assembly of the fittings to containers and cannot be damaged when handling and securing the container.

5.7.2 Markings shall include, at a minimum, the following:

.1 trade mark or stamp or sign or number of manufacturer;

.2 heat number or symbol identifying the cast;

.3 abbreviation for placement of the fitting on the container;

.4 abbreviated name of "Russian Maritime Register of Shipping" — RS (optional).

PART II. GENERAL FREIGHT CONTAINERS

1 GENERAL

1.1 APPLICATION

1.1.1 The requirements of this Part apply to general freight containers.

1.1.2 The general freight containers shall comply with the requirements of Part I "Basic Requirements" and the requirements of this Part.

1.1.3 The general freight containers differing in design and dimensions from requirements set out in Section 2, including swap bodies, are subject to special consideration by the Register in each particular case.

1.1.4 Technical requirements for platform containers are set forth in the appropriate part of the Rules.

1.2 DEFINITIONS AND EXPLANATIONS

1.2.1 The definitions and explanations relating to the general terminology of these Rules are given in 1.1 of the General Regulations for the Technical Supervision of Containers.

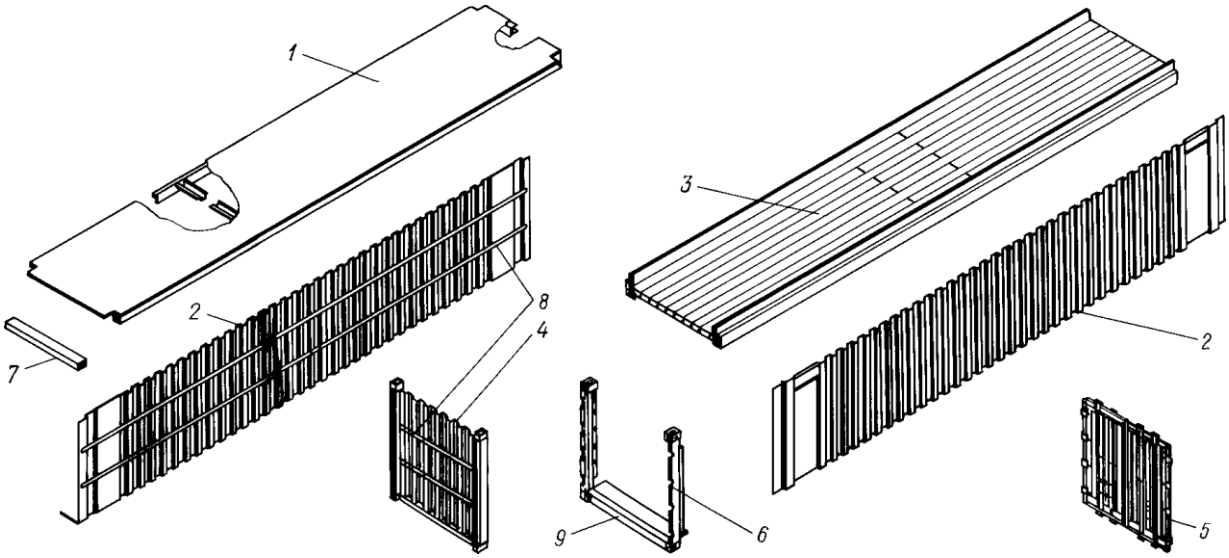

Fig. 1.2.1-1
Structural elements of general cargo containers:

1 – roof; 2 – side wall; 3 – base; 4 – front wall; 5 – door; 6 – rear corner post; 7 – rear top rail;
8 – cargo securing arrangements; 9 – rear bottom rail

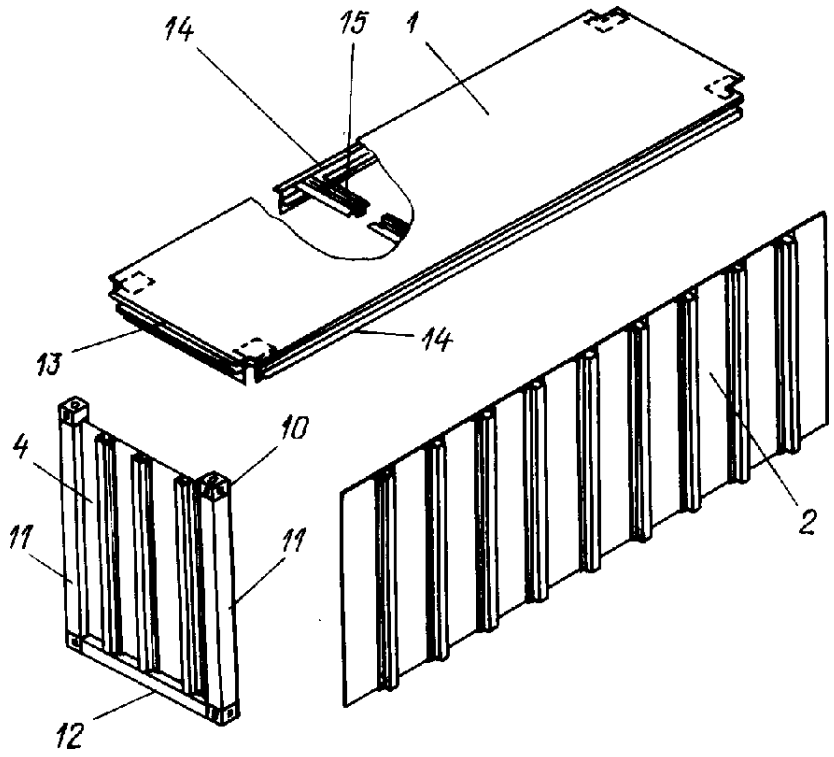

Fig. 1.2.1-2
Structural elements of general cargo containers:

1, 2, 4 – refer to Fig. 1.2.1-1; 10 – corner fitting; 11 – front corner post; 12 – front bottom rail; 13 – front top rail; 14 – top side rail; 15 – roof cross member

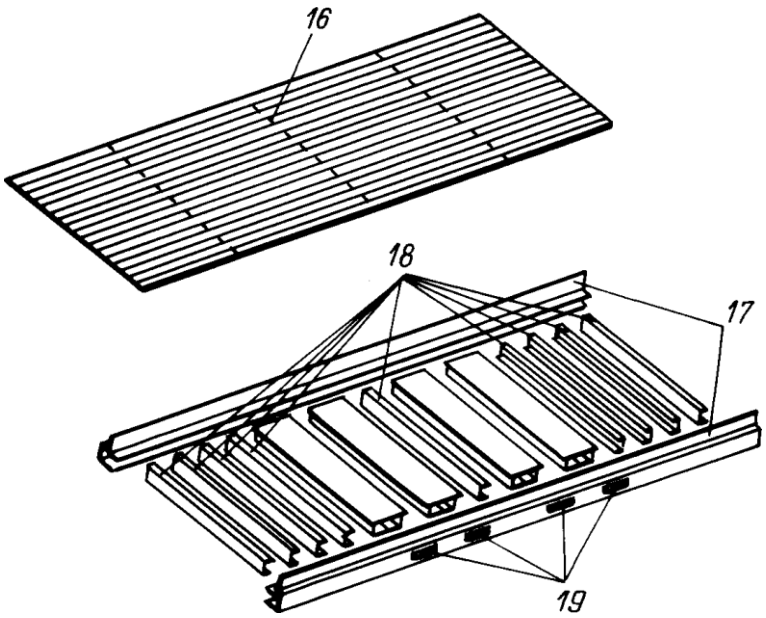

Fig. 1.2.1-3
Structural elements of general cargo containers:

16 – floor; 17 – bottom side rail; 18 – bottom cross-member; 19 – fork lift pockets

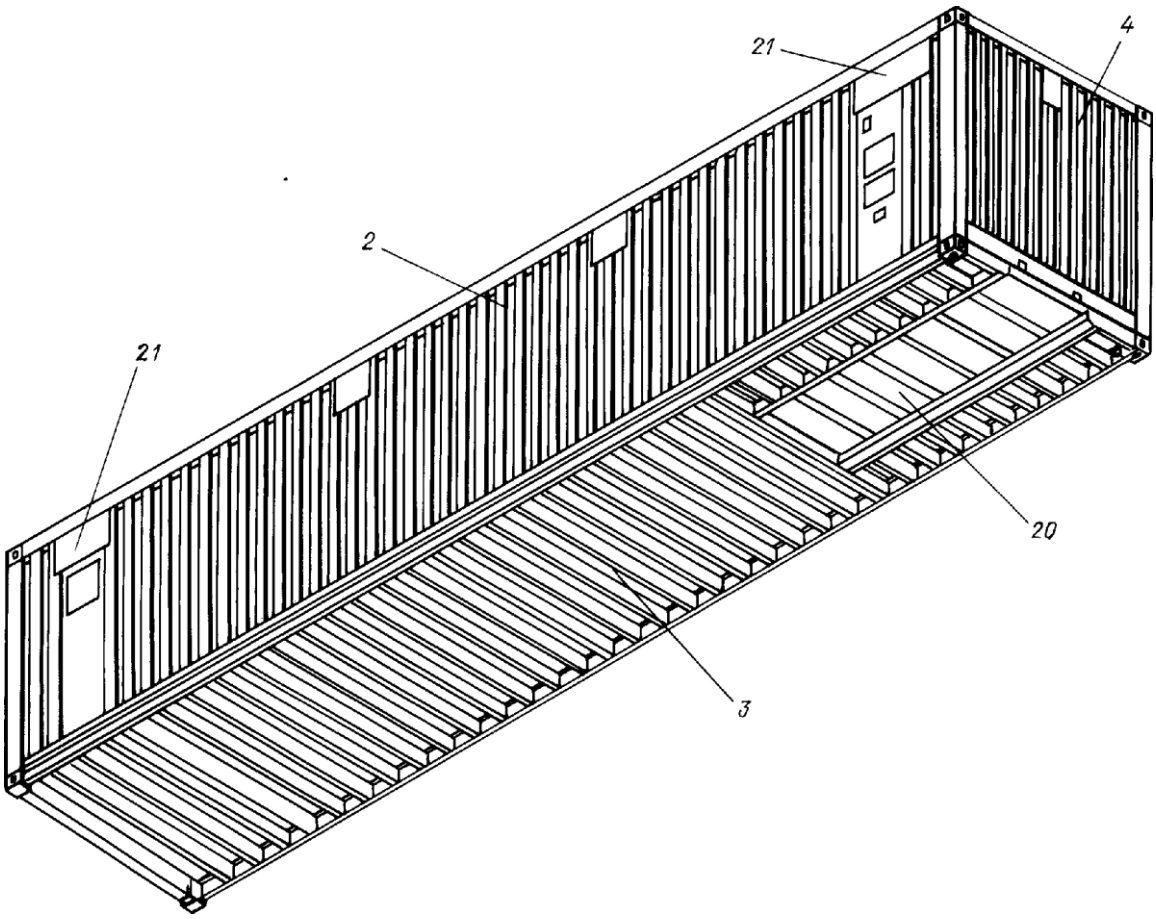

Fig. 1.2.1-4
Structural elements of general cargo containers:

2, 3, 4 – refer to Fig. 1.2.1-1; 20 – gooseneck tunnel; 21 – ventilation unit

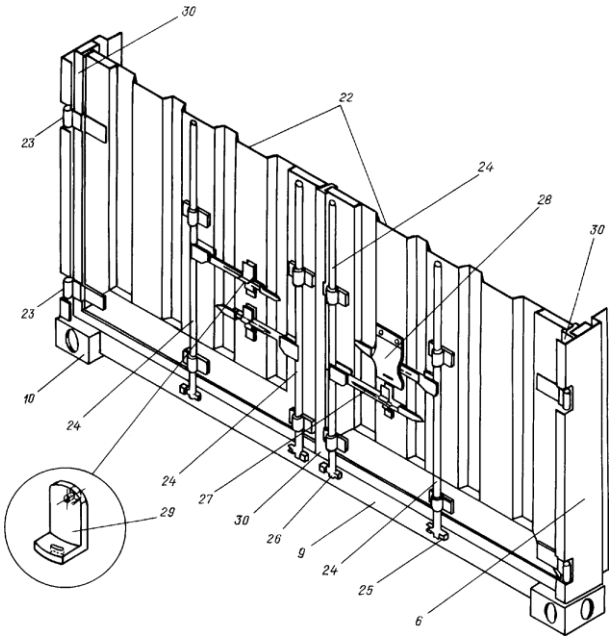

Fig. 1.2.1-5
Structural elements of general cargo containers (door):

6, 9 – refer to Fig. 1.2.1-1; 10 – refer to Fig. 1.2.1-2; 22 – door panel; 23 – hinge; 24 – door locking bar; 25 – cam retainer; 26 – cam; 27 – door locking handle; 28 – Customs seal protection cover (allowed not to be fitted); 29 – device for affixing the Customs seal; 30 – door gasket

1.3 SCOPE OF TECHNICAL SUPERVISION

1.3.1 Technical supervision of the Register shall cover:
framework (bearing structure);
walls, floor and roof;
corner fittings; doors;
covers for open top containers.

1.4 TECHNICAL DOCUMENTATION

1.4.1 The scope of the technical documentation, submitted for consideration, as well as the forms for confirming the compliance of the technical documentation with the RS requirements, are specified in Table 1.4.1 and may be changed upon the agreement with RS.

Table 1.4.1

№	Document name		Set[1]	Review result[2]
1	Technical conditions or technical specification		I	A
2	Prototype static test program, if testing will be carried out at the manufacture		II	A
3	Assembly drawing of:			
	.1	container[3]	I	A
	.2	rear end wall	I	A
	.3	front end wall	I	A
	.4	side wall	I	A

№		Document name	Set[1]	Review result[2]
	.5	base	I	A
	.7	roof	I	A
	.8	plates (CSC and CCC)	I	A
	.9	marking	I	A
	.10	cover (type of seams and corners) with a cable and its tips for imposing customs stamps and seals	I	A
4	Drawings indicating dimensions and used materials of (if this information is not on the assembly drawings):			
	.1	corner and intermediate posts	II	A
	.2	upper longitudinal, end and intermediate beams	II	A
	.3	lower longitudinal, end and intermediate beams	II	A
	.4	element to which the CCC requirements apply	II	A
	.5	floors (fastening, sealing, dimensions of plywood, boards and configuration of their edges)	II	A
	.6	doors with seals	II	A
	.7	door locks	II	A
	.8	arches for a cover	II	A
	.9	locks of the upper beams, if the beams are removable or folding	II	A
	.10	cargo securing devices	II	A

[1] In case of submission of technical documentation in parts, documents marked with the number (I) should be submitted with the first part. Documents marked with the number (II) may be submitted with the second and subsequent parts. The volume of technical documentation provided with the first part may be changed upon the agreement with RS.
[2] A — approved; Ag — agreed; FI – for information. If necessary, the documents may be approved and/or agreed subject to the implementation of the comments of the RS letter.
[3] RS may additionally request documents on the floor materials and antiseptic impregnation, coatings and sealing materials used.

N o t e s : 1. Documents specified in this table may not be provided upon the agreement with RS, if all necessary information is contained in other documents, included in the set of technical documentation.
2. Documents containing information about structural elements that are not applicable to a specific container are not submitted to RS.

2 TECHNICAL REQUIREMENTS

2.1 INTERNAL DIMENSIONS

2.1.1 Closed containers are to have internal dimensions not less than given in Table 2.1.1.

N o t e . Where a top corner fitting projects into the internal space specified in Table 2.1.1, that part of the corner fitting projecting into the container shall not be considered as reducing the size of the container.

Table 2.1.1

Minimum internal dimensions of containers, mm

Dimensions	Minimum height	Minimum width, mm	Minimum length, mm
1EEE	Rated height of the external part of a container minus 214 mm	2330	13542
1EE			13542
1AAA			11998
1AA			11998
1A			11998
1BBB			8931
1BB			8931
1B			8931
1CCC			5867
1CC			5867
1C			5867
1D			2802

2.2 DOOR OPENING

2.2.1 Containers shall be provided with a door opening at least at one end.

2.2.2 Closed 1A, 1B, 1C and 1D containers shall have a door opening preferably having dimensions equal to those of the internal cross-section of the container and in any case not less than 2134 mm high and 2286 mm wide; while for 1EE, 1AA, 1BB and 1CC containers the door opening shall be not less than 2261 mm high and 2286 mm wide and for 1EEE, 1AAA, 1BBB, 1CCC containers – not less than 2566 mm high and 2286 mm wide.

2.3 DOORS

2.3.1 All doors shall open and close freely. The closing shall provide tightness. The angle of opening of each end door shall be 270°, and that of a side door shall be 180°. Suitable stop devices shall be provided to keep the doors open.

3 TESTING

3.1 GENERAL

3.1.1 Irrespective of the design, size and material used for the manufacture, the ISO series 1 general freight containers shall be subjected to test loadings and testing procedures set forth in 3.2 through 3.16, while the specified dimensions and tare mass shall be determined in accordance with the requirements of 3.17.

The container may be designed for other loads as regards tests specified in 3.7, 3.10, 3.13 and 3.14 which are subject to special consideration by the Register.

3.1.2 The test devices for creating the required test loadings shall not interfere with free deflection of container sections under test.

3.1.3 Upon completion of each test the container shall show neither permanent deformations nor abnormalities which could render it incapable of being used for its designed purpose.

No part of the container upon completion of strength tests of end and side walls shall project beyond the container external dimensions. Requirements of 2.3.1 and 2.3.2.1, Part I "Basic Requirements" shall be also complied with.

3.1.4 The order of tests is not mandatory, except that the test under 3.15 shall be made last and be applied to each container.

3.2 LIFTING BY TOP CORNER FITTINGS

3.2.1 The container having the prescribed internal loading shall be carefully lifted in such a way that no significant acceleration forces are applied.

After lifting, the container shall be suspended for 5 min and then carefully lowered to the supports.

3.2.2 The container shall have a uniformly distributed loading such that the combined mass of the container and test load is equal to $2R$.

3.2.3 The external forces applied to the container shall be such as to permit lifting a combined mass of $2R$, by the following methods:

for 1AAA, 1AA, 1A, 1AX, 1BBB, 1BB, 1B, 1BX, 1CCC, 1CC, 1C and 1CX containers, vertically at all four fittings (refer to Fig. 3.2.3, *a*);

for 1D and 1DX containers, at all four corner fittings, so that the angle between each lifting device and the vertical is 30° (refer to Fig. 3.2.3, *b*);

for 1EEE and 1EE containers, vertically at four corner fittings and separately at four intermediate fittings.

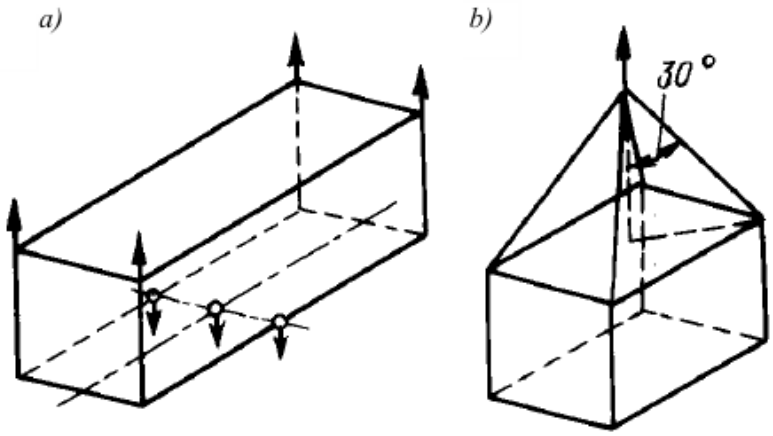

Fig. 3.2.3
Lifting by top corner fittings

3.2.4 When lifting by the top corner fittings, the measurements shall be taken to determine:

.1 deflection at the lowest points of side rails and at longitudinal centre line of the base while the container is loaded and supported by bottom corner fittings;

.2 maximum elastic deformations during lifting;

.3 permanent set remaining on removal of the load.

3.3 LIFTING BY BOTTOM CORNER FITTINGS

3.3.1 The container having the prescribed loading shall be carefully lifted in such a way that no significant acceleration forces are applied.

After lifting, the container shall be suspended for 5 minutes.

3.3.2 The container has a uniformly distributed loading such that the combined mass of the container and test load is equal to $2R$.

3.3.3 The external forces applied to the container shall be such as to permit lifting a combined mass of $2R$, by the following method:

the lifting devices shall be secured through the side apertures of the bottom corner fittings so that the lines of action of the lifting forces and the outer faces of corner fittings shall be no farther apart than 38 mm, with the lifting forces applied at an angle to the horizontal (refer to Fig. 3.3.3) of:

30°, for 1EEE, 1EE, 1AAA, 1AA, 1A and 1AX containers;

37°, for 1BBB, 1BB, 1B and 1BX containers;

45°, for 1CCC, 1CC, 1C and 1CX containers;

60°, for 1D and 1DX containers.

1EEE and 1EE containers shall be additionally lifted by the bottom intermediate fittings using the same lifting devices and at the same angle to the horizontal of the forces applied as in case of lifting by corner fittings.

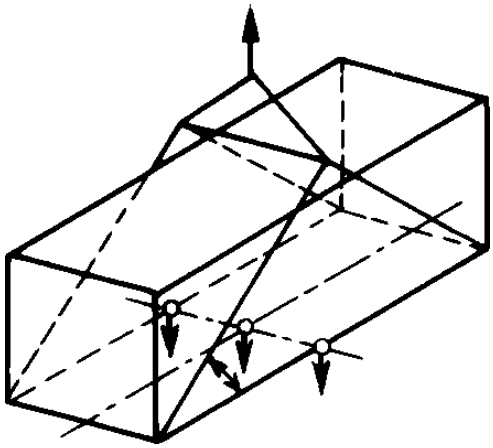

Fig. 3.3.3
Lifting by the bottom corner fittings

3.3.4 When lifting by the bottom corner fittings the measurements shall be taken to determine the maximum elastic deformations during lifting and the permanent set of the container base.

3.4 LIFTING BY FORK LIFT POCKETS

3.4.1 Tests are carried out for 1CCC, 1CC, 1C, 1CX, 1D and 1DX containers having fork lift pockets.

The container having the prescribed loading shall be carefully lifted in such a way that no significant acceleration forces are applied.

After lifting, the container shall be suspended for 5 min.

3.4.2 The container shall have a uniformly distributed internal loading such that the combined mass of the container and test load is equal to $1{,}6R$.

3.4.3 The external forces applied to the container shall be such as to permit lifting of a combined mass of $1{,}6R$, in which case the container shall be placed on two bars which are in the same horizontal plane, one bar being centered within each fork lift pocket. The bars shall be of the same width as the forks intended to be used for handling the container, but not less than 200 mm, and shall project into the fork pocket for a distance of 1828 + 3 mm, measured from the outer face of the container side.

3.4.4 In case of containers having four fork lift pockets on each side, tests under 3.4.3 shall be carried out for the most widely spaced pockets (outer), which are used for lifting a loaded container.

For pockets (inner) spaced at the least intervals which are used for lifting an empty container, the test procedure is similar to that outlined in 3.4.3, except that the external force applied shall be equal to $0{,}625R$.

3.4.5 When lifting by fork lift pockets the measurements shall be taken to determine the maximum elastic deformations during lifting and permanent set of the container base.

3.5 LIFTING WITH THE USE OF GRAPPLER ARMS

3.5.1 Tests are carried out for containers provided with grappler arm lifting areas.

The container having the prescribed internal loading shall be carefully lifted in such a way that no significant acceleration forces are applied. After lifting, the container shall be suspended for 5 min and then carefully lowered.

3.5.2 The container has a uniformly distributed internal loading such that the combined mass of the container and test load is equal to $1{,}25R$.

3.5.3 Where areas are provided for lifting by grappler arms, the container shall be placed on four pads in the same horizontal plane, one under each grappler arm area. These pads shall be of the same dimensions as the lifting area of the grappler arms intended to be used for handling the container, but not less than 32×254 mm.

3.5.4 When lifting with the use of grappler arms the measurements shall be taken to determine the maximum elastic deformations during lifting and permanent set remaining on removal of the internal load.

3.6 ADDITIONAL LIFTING METHODS

3.6.1 Where containers are designed to be lifted in the loaded condition by any other additional method not covered by 3.2, 3.3 and 3.5, they shall also be tested with internal loading and externally applied forces representative of the acceleration conditions appropriate to the method.

3.6.2 When carrying out the tests, the measurements shall be taken to determine the maximum elastic deformations during lifting and permanent set remaining on removal of the load.

3.7 STACKING

3.7.1 This test shall be carried out to prove the ability of a fully loaded container to support a superimposed mass of containers, taking into account conditions aboard ships at sea and the relative eccentricities between superimposed containers (refer to Fig. 3.7.1).

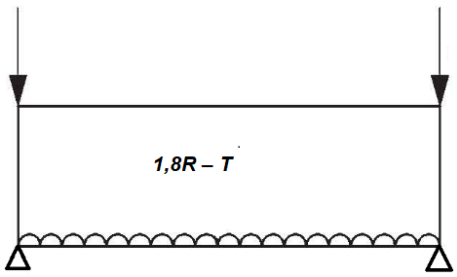

Fig. 3.7.1
Stacking

3.7.2 The container shall be placed on four level pads, one under each bottom corner fitting.

The pads shall be centralized under the fittings, and shall be substantially of the same plan dimensions as the fittings. The container shall have a load uniformly distributed over the floor in such a way that the combined mass of the container and the test load is equal to 1,8*R*.

The container shall be subjected to vertical forces, applied either to all four corner fittings simultaneously or to each pair of end fittings.

The forces shall be applied through a test fixture equipped with corner fittings as specified in ISO 1161, or equivalent fittings which have imprints of the same geometry (i.e. with the same external dimensions, chamfered aperture and rounded edges) as the bottom face of the bottom corner fitting specified in ISO 1161. If equivalent fittings are used, they shall be designed to produce the same effect on the container under the test loads as when corner fittings are used.

In all cases, the forces shall be applied in such a manner that rotation of the planes through which the forces are applied and on which the container is supported is minimized. The force shall be centred over off head position.

The test fittings or pads shall be placed in relation to the top fittings so as to cover all the potential positions of their offset by 25,4 mm laterally and 38 mm longitudinally.

If the main structure of the container is symmetrical with respect to the diametral plane, then it is allowed to carry out tests only with a diagonal displacement of the fittings (refer to Fig. 3.7.2).

The container shall be exposed to the externally applied forces during 5 min.

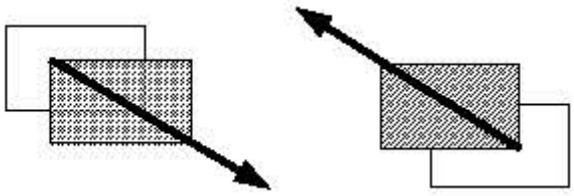

Fig. 3.7.2
Offset directions for symmetrical container design

3.7.3 The forces applied during the tests to the upper corner fittings of the container are specified in Table 3.7.3.

Table 3.7.3

Forces to be applied in stacking test

Container designation	Forces applied simultaneously to four uprights		Forces applied simultaneously to two uprights		Superimposed mass represented by test force	
	kN	kg	kH	kg	kg	lb
1AAA, 1AA, 1A, 1AX, 1BBB, 1BB, 1B, 1BX, 1CCC, 1CC, 1C и 1CX	3767	384048	1883	192024	213360	470380
1D и 1DX	896	91440	448	45720	50800	112000

Notes: 1. The forces used for testing 1EEE, 1EE containers in different stacking models are specified in ISO 1496-1 and are subject to special consideration by the RS.
2. The values indicated for containers 1AAA, 1AA, 1A, 1AX, 1BBB, 1BB, 1B, 1BX, 1CCC, 1CC, 1C and 1CX correspond to ISO 1496-1 and are calculated on the basis of eight-tier stacking of containers, mass R = 30480 kg and acceleration 1,8g. Other quantities are subject to special consideration by the RS.
3. The values indicated for containers 1D and 1DX are in accordance with ISO 1496-1 and are calculated based on six-tier stacking of containers, mass R = 10160 kg and acceleration 1,8g. Other quantities are subject to special consideration by the RS.
4. Forces applied to each upper corner fitting during testing of containers designed for operation without one door shall be 0,25 x 1,8g x design stacking mass.

3.7.4 Before, during and after the tests, measurements of the deformations of the uprights and lower beams of the container base, as well as measurements of the length of the uprights of the container, shall be carried out. Deformations of the uprights should be determined by ½ of the rack height in the longitudinal and transverse directions. Fig. 3.7.4 shows the places for measuring deformations during testing.

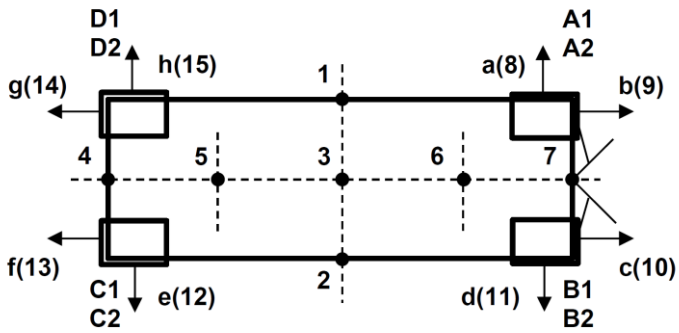

Fig. 3.7.4
Places for measuring deformations

Upon completion of the test, the container shall show neither permanent deformation which will render it unsuitable for use nor abnormality which will render it unsuitable for use, and the dimensional requirements affecting handling, securing and interchange shall be satisfied.

3.8 STRENGTH OF THE ROOF (where provided)

3.8.1 This test shall be carried out to prove the ability of the rigid roof of a container, where fitted, to withstand the loads imposed by persons working on it.

3.8.2 A load of 300 kg shall be uniformly distributed over an area of 600 mm x 300 mm located at the weakest area of the rigid roof of the container.

3.8.3 Before, during and after the tests, deformations shall be measured at two positions (*1* and *2* — refer to Fig. 3.8.3) of the test load.

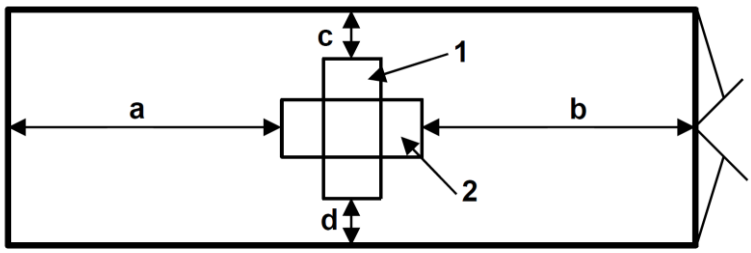

Fig. 3.8.3
Strength of the roof

Upon completion of the test, the container shall show neither permanent deformation which will render it unsuitable for use nor abnormality which will render it unsuitable for use, and the dimensional requirements affecting handling, securing and interchange shall be satisfied.

3.9 FLOOR STRENGTH

3.9.1 This test shall be carried out to prove the ability of a container floor to withstand the concentrated dynamic loading during cargo operations involving trucks or similar devices (refer to Fig. 3.9.1).

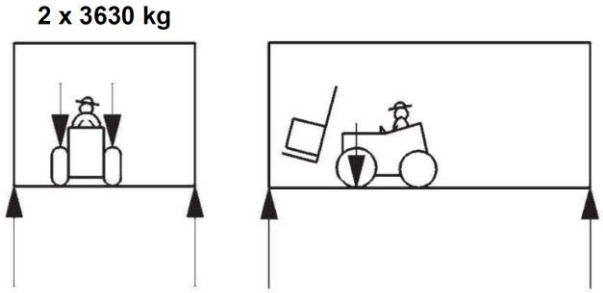

Fig. 3.9.1
Floor strength

3.9.2 The test shall be performed using a test vehicle equipped with tyres, with an axle load of 7260 kg (i.e. 3 630 kg on each of two wheels). It shall be so arranged that all points of contact between each wheel and a flat continuous surface lie within a rectangular envelope measuring 185 mm (in a direction parallel to the axle of the wheel) by 100 mm, and that each wheel makes physical contact over an area within this envelope of not more than 142 cm^2. The wheel width shall be nominally 180 mm and the wheel centres shall be nominally 760 mm.

The test vehicle shall be manoeuvred over the entire floor area of the container both longitudinally and transversally. The test shall be made with the container resting on four level supports under its four bottom corner fittings, with its base structure free to deflect.

N o t e . For the purpose of compliance with the International CSC, the axle load for the truck may be assumed 5460 kg.

3.9.3 Deformation measurements shall be taken at several points on the base before, during and after the test. Fig. 3.9.3 shows the places for measuring deformations during testing.

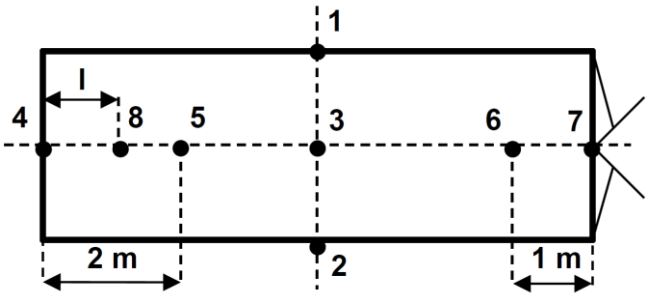

Fig. 3.9.3
Places for measuring deformations
l — 0,7…1,2 m

Upon completion of the test, the container shall show neither permanent deformation which will render it unsuitable for use nor abnormality which will render it unsuitable for use, and the dimensional requirements affecting handling, securing and interchange shall be satisfied.

3.10 TRANSVERSE RACKING

3.10.1 The 1EEE, 1EE, 1AAA, 1AA, 1A, 1AX, 1BBB, 1BB, 1B, 1BX, 1CCC, 1CC, 1C and 1CX containers shall be capable of withstanding the transverse racking forces.

3.10.2 A container with no internal loading shall be placed on four level supports, one under each of the four bottom corner fittings (refer to Fig. 3.10.2-1).

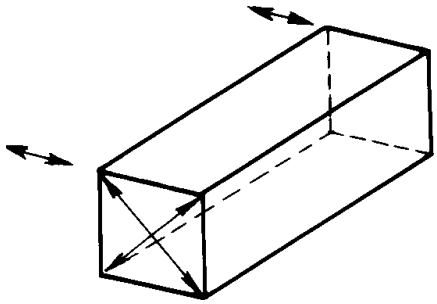

Fig. 3.10.2-1
Transverse racking test

The container shall be restrained against vertical movement by means of anchor device through the bottom apertures of bottom corner fittings, and lateral restraint is provided by means of anchor device acting alternately through the side apertures of bottom corner fittings diagonally opposite to those at which the forces are applied. External forces equal to 150 kN shall be applied either separately or simultaneously to each of the top corner fittings on one side of the container in lines parallel both to the base and to the planes of the end walls. The forces are applied first towards and then away from the top corner fittings. If the end walls of the container are symmetrical about their own vertical centre lines, one side only need be tested. With asymmetric ends, the forces shall be applied to both sides.

The changes in lengths of the diagonals D5 and D6 (refer to Fig. 2.2.1-5, Part I "Basic Requirements") shall be measured in the course of testing. The sum of these changes shall not exceed 60 mm.

N o t e s: 1. The 1EEE and 1EE containers shall be tested with loads applied according to Figs. 3.10.2-2 – 3.10.2-9.

2. Forces applied during the tests of containers designed for one door off operation shall be specified in the design.

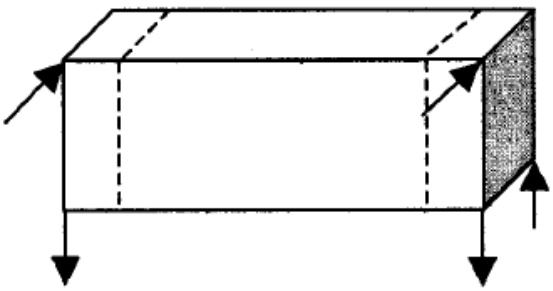

Fig. 3.10.2-2

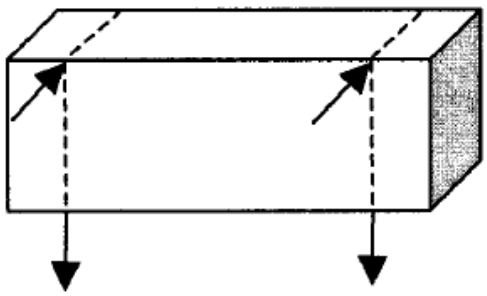

Fig. 3.10.2-3

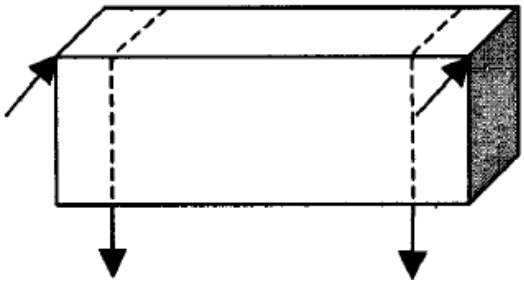

Fig. 3.10.2-4

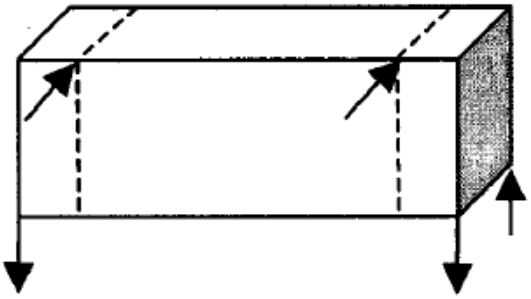

Fig. 3.10.2-5

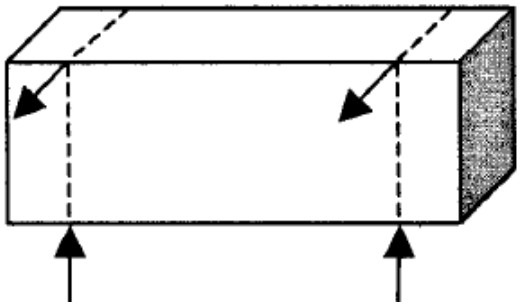

Fig. 3.10.2-6

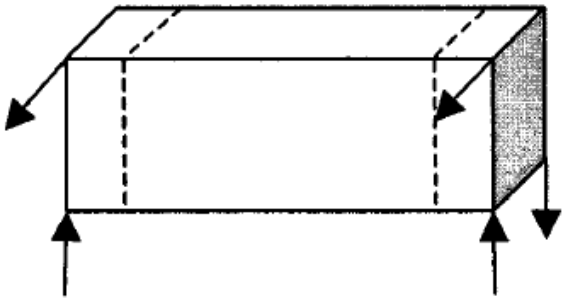

Fig. 3.10.2-7

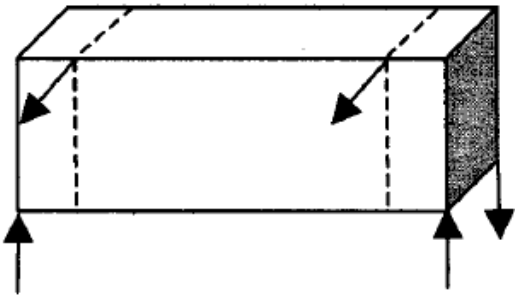

Fig. 3.10.2-8

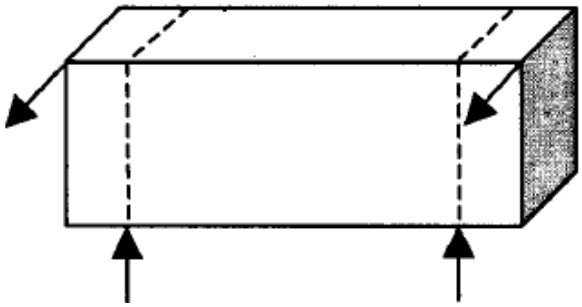

Fig. 3.10.2-9

3.11 LONGITUDINAL RACKING

3.11.1 The 1EEE, 1EE, 1AAA, 1AA, 1A, 1AX, 1BBB, 1BB, 1BX, 1CCC, 1CC, 1C and 1CX containers shall be capable of withstanding the longitudinal racking forces.

3.11.2 A container with no internal loading shall be placed on four level supports, one under each of the four bottom corner fittings (refer to Fig. 3.11.2-1). The container shall be restrained against vertical movement by means of an anchor device acting through the bottom apertures of bottom corner fittings. Longitudinal restraint is provided by means of the anchor device acting alternately through the end apertures of bottom corner fittings diagonally opposite to those at which the forces are applied.

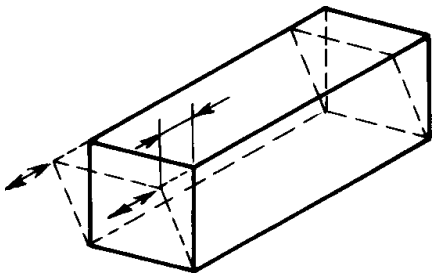

Fig. 3.11.2-1
Longitudinal racking test

External forces equal to 75 kN shall be applied separately or simultaneously to each of the top corner fittings on one end of the container in lines parallel both to the base and the planes of the sides. The forces are applied first towards and then away from the top corner fittings.

If the sides of the container are symmetrical about their own vertical centre lines and are also of similar construction, one end only shall be tested. Where the sides are asymmetrical and of a differing construction as many tests shall be carried out as are necessary to cover all possible modifications. Longitudinal displacement of top side rails shall be measured during the test. The value of displacement shall not exceed 25 mm.

Note. The 1EEE and 1EE containers shall be tested with loads applied according to Figs. 3.11.2-2 – 3.11.2-5.

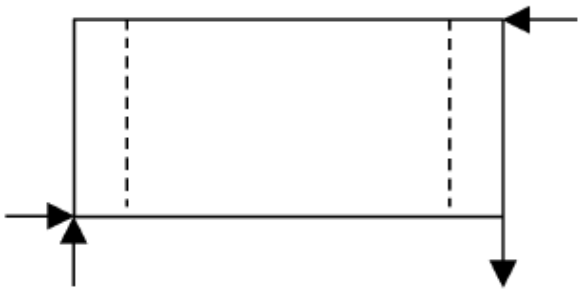

Fig. 3.11.2-2

Fig. 3.11.2-3

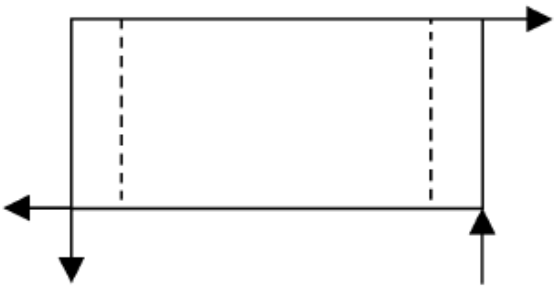

Fig. 3.11.2-4

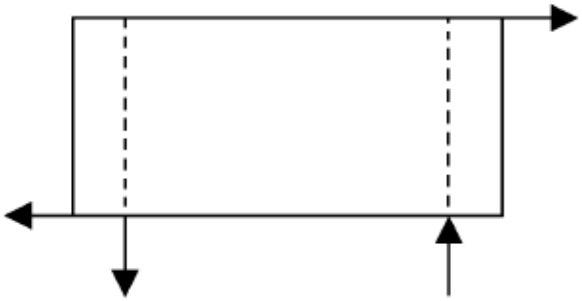

Fig. 3.11.2-5

3.12 LONGITUDINAL RESTRAINT (STATIC TEST)

3.12.1 A container having a uniformly distributed internal loading such that the combined mass of the container and test load is equal to R, shall be restrained longitudinally by securing the bottom corner fittings (through the bottom apertures) at one end of the container to suitable anchor points (refer to Fig. 3.12.1-1). Two external forces, each equal to Rg, shall be applied horizontally to both unsecured bottom corner fittings through the bottom apertures, first towards and then away from the anchor points so that the base of the container is subjected to the action of a combined force of $2Rg$.

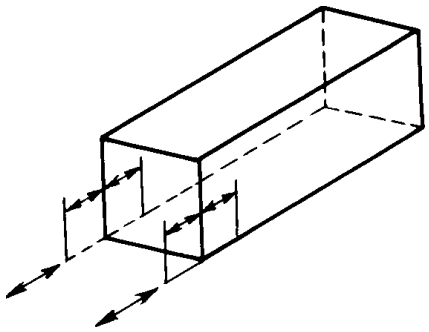

Fig. 3.12.1-1
Longitudinal restraint

In the course of testing the change in length of each bottom side rail shall be measured in both directions.

N o t e . The 1EEE and 1EE containers shall additionally be tested with loads applied to intermediate fittings according to Figs. 3.12.1-2 – 3.12.1-3.

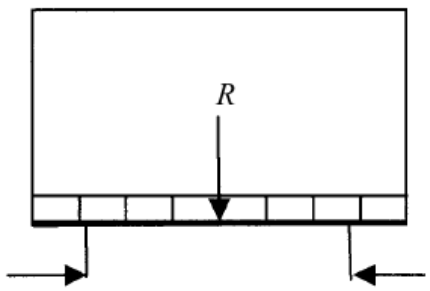

Fig. 3.12.1-2

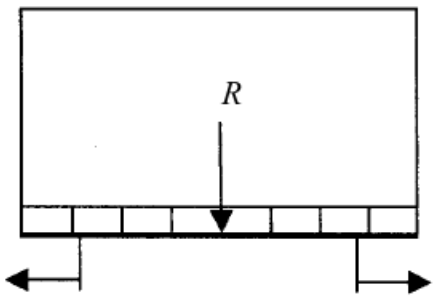

Fig. 3.12.1-3

3.13 STRENGTH OF END WALLS

3.13.1 This test shall be carried out to prove the ability of a container to withstand longitudinal external restraint under dynamic conditions of railway operations (refer to Fig. 3.13.1).

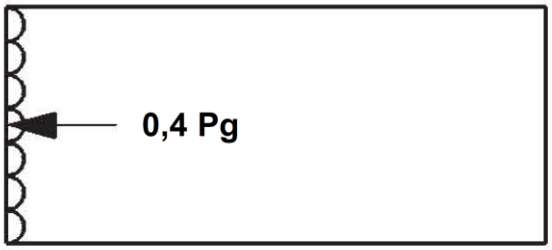

Fig. 3.13.1
Strength of end walls

3.13.2 The container shall have each end wall tested. In the case symmetrical construction, one end only need be tested.

The end walls should withstand an internal load of 0,4Pg. Moreover, if the end walls are designed for a load other than 0,4Pg, then they should be tested for this load.

The internal loading shall be uniformly distributed over the wall under test and arranged to allow free deflection of the wall.

3.13.3 Before, during and after the tests, strain measurements should be taken at several points on the wall. Fig. 3.13.3 shows the places for measuring deformations during testing.

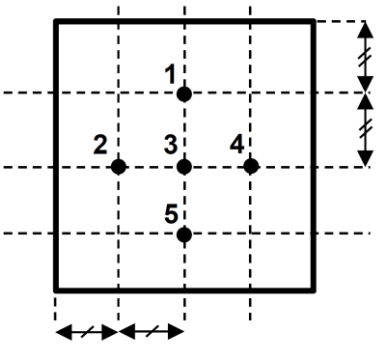

Fig. 3.13.3
Places for measuring deformations

Upon completion of the test, the container shall show neither permanent deformation which will render it unsuitable for use nor abnormality which will render it unsuitable for use, and the dimensional requirements affecting handling, securing and interchange shall be satisfied.

3.14 STRENGTH OF SIDE WALLS

3.14.1 This test shall be carried out to prove the ability of a container to withstand the forces resulting from ship movement (refer to Fig. 3.14.1).

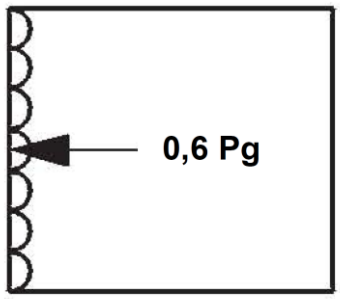

Fig. 3.14.1
Strength of side walls

3.14.2 The container shall have each side wall tested. In the case symmetrical construction, one side only need be tested.

Side walls should withstand an internal load of 0,6Pg. Moreover, if the side walls are designed for a load other than 0,6Pg, then they should be tested for this load.

The internal loading shall be uniformly distributed, applied to each wall separately and arranged to allow free deflection of the side wall and its longitudinal members.

Open-top containers fitted with roof bows shall be tested with the roof bows in position.

3.14.3 Before, during and after the tests, strain measurements should be taken at several points on the wall. Fig. 3.14.3 shows the places for measuring deformations during testing.

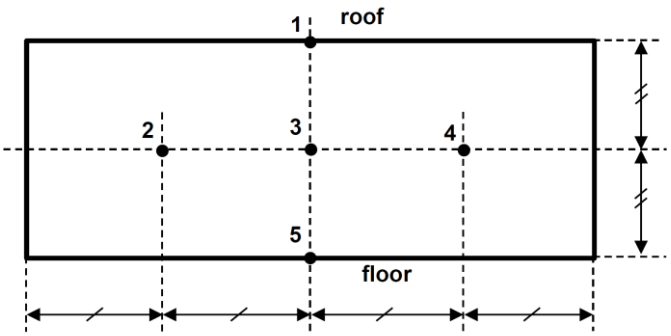

Fig. 3.14.3
Places for measuring deformations

Upon completion of the test, the container shall show neither permanent deformation which will render it unsuitable for use nor abnormality which will render it unsuitable for use, and the dimensional requirements affecting handling, securing and interchange shall be satisfied.

3.15 WEATHERTIGHTNESS

3.15.1 All outer surfaces, connections and seams of the container shall be subjected to a stream of water, providing that:

.1 nozzle diameter is 12,5 mm;
.2 water pressure measured at the nozzle outlet is 0,1 MPa;
.3 distance from the nozzle to the surface under test is 1,5 m;
.4 nozzle directed to the surface is at an angle of 90°;
.5 speed of stream is 100 mm/s.

Several nozzles may be used for testing provided that the above requirements are fulfilled as for a single nozzle.

Upon completion of the test the inner surfaces of the container shall be dry. The weathertightness test may be performed by any other method approved by the Register.

3.16 STRENGTH OF CARGO SECURING DEVICES

3.16.1 The test shall be carried out for containers fitted with cargo securing devices. For this testing a hook or shackle having a maximum diameter of 20 mm shall be used, the base frame of the container being approximately horizontal.

3.16.2 The cargo securing devices shall be capable of withstanding a loading which is 1,5 times higher than the design loading (refer to Fig. 3.16.2). The lines of action of the forces applied are directed:

for arrangements fitted on the base structure, at right angles to the centre line of the structural elements and at an angle of 45° to the horizontal plane;

for arrangements fitted above the base structure, at an angle of 45° upwards and downwards (where applicable) in respect to the horizontal plane;

for arrangements fitted on top beams of the container, at an angle of 45° downwards to the horizontal plane.

3.16.3 When containers are fitted with cargo securing devices of different types, at least one device of each type shall be tested.

3.16.4 The minimum design loading for the arrangements fitted on the floor is equal to 1000 kg, for other arrangements it is 500 kg. The arrangements shall be subjected to the loading for at least 5 min.

On completion of the test, neither the cargo securing devices, nor their attachments to the container structure, nor the container structure itself shall show any permanent deformation or abnormality which will render it unsuitable for continuous service at full rated load.

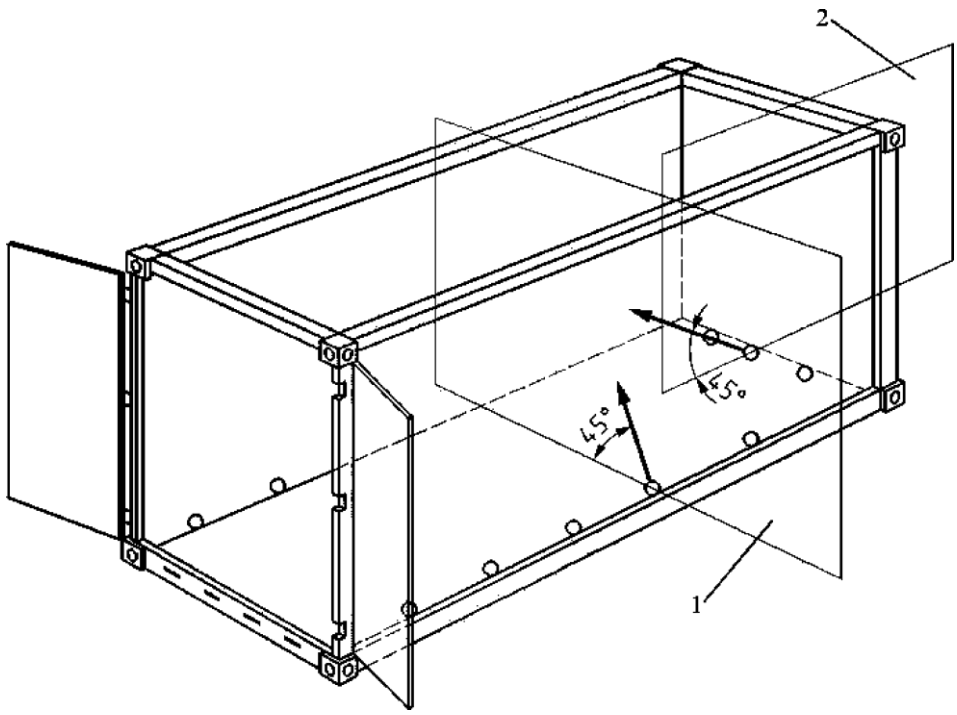

Fig. 3.16.2:

1 – transverse plane; 2 – longitudinal plane

3.17 INSPECTIONS

3.17.1 Inspections comprise visual inspection, verification of specified dimensions and weighing of the container.

Visual examination shall be conducted during the manufacture of the container and/or upon completion of works, to ascertain that the container design, materials and workmanship comply with the requirements of these Rules. Visual examination shall include checking of the opening and closing of the doors.

The specified dimensions shall be verified before commencement and upon completion of the tests. A container shall be weighed upon completion of all works including painting

.

PART III. THERMAL CONTAINERS

1 GENERAL

1.1 APPLICATION

1.1.1 The requirements of this Part apply to thermal containers.

1.1.2 The requirements of this Part also apply to offshore thermal containers and to thermal containers of the swap body type, where applicable.

1.1.3 Thermal containers shall comply with the requirements of Part I "Basic Requirements", and with the requirements of this Part.

1.1.4 Thermal containers differing in design and dimensions from those defined in this Part are subject to special consideration by the Register in each particular case.

1.2 DEFINITIONS AND EXPLANATIONS

1.2.1 The definitions and explanations relating to the general terminology of these Rules are given in 1.1. of the General Regulations for the Technical Supervision of Containers. For the purpose of this Part the following definitions and explanations have been adopted.

Floor air duct is a passage or passages located beneath the freight support surface for air circulation.

Ceiling duct is a passage or passages located in the proximity to the ceiling to the direct air flow.

Batten is a structural element of the container protruding from the inside walls and/or roof, built integral with, or fastened to the walls or roof, or installed during cargo loading to create a clearance between cargo and wall and/or roof for air circulation.

Drainage system is a system intended to drain liquid from defrosting internal surfaces of the container and to relieve internal pressure, and which comprises trays, pipes, drain openings and appropriate closures.

Thermal container is a container, the walls, doors, floor and roof of which are insulated to limit heat exchange between the inside and outside of the container.

The thermal containers include the following container types:

heated container is a thermal container with a heating plant;

refrigerated and heated container is a thermal container served by a refrigerating plant or using an expandable refrigerant and heating plant;

mechanically refrigerated container is a thermal container served by a refrigerating plant (e. g. compression or absorption type, etc.);

refrigerated container with expendable refrigerant is a thermal container using a source of cold (such as ice, dry ice with or without sublimation control, liquefied gases with or without evaporation control) and requiring no external power supply;

insulated container is a thermal container without the use of permanently attached devices for cooling and/or heating.

New thermal container is a thermal container manufactured within 7 days before its survey and having the maximum heat transfer value U_{max} in accordance with Table 2.5.1.

Old thermal container is a thermal container having the maximum heat transfer value U_{max} exceeding the value U_{max} by 20 % due to change in insulation properties (see Table 2.5.1).

Removable equipment means power generating unit or other equipment designed to be attached or detached from thermal containers when transfer for other types of transport:

internal equipment is the equipment arranged within the overall dimensions of the container as per ISO 668;

external equipment is the equipment fully or partially arranged outside the overall dimensions of the container as per ISO 668.

Note. It is assumed that the external equipment shall be removable or folding to facilitate its transportation using various transport means.

1.3 TECHNICAL SUPERVISION

1.3.1 Technical supervision of the Register shall cover:

.1 framework (bearing structure including the walls, insulation, floor and roof);

.2 corner fittings;

.3 doors and door locks;

.4 stationary refrigerating and/or heating plants of the container;

.5 electrical equipment;

.6 electric power source with its prime mover.

1.3.2 In the course of manufacture components, assemblies, plants and equipment, specified in 1.3.1 shall comply with the requirements of these Rules.

1.4 TECHNICAL DOCUMENTATION

1.4.1 The scope of the technical documentation, submitted for consideration, as well as the forms for confirming the compliance of the technical documentation with RS requirements, are specified in Table 1.4.1 and may be changed upon the agreement with RS.

Table 1.4.1

№	Document name		Set[1]	Review result[2]
1	Technical conditions or technical specification		I	A
2	Program of:			
	.1	static testing of prototype, if testing will be carried out at the manufacture	II	A
	.2	thermal tests, if the tests will be carried out at the manufacturer	II	A
3	Assembly drawing of:			
	.1	container[3]	I	A
	.2	rear end wall	I	A
	.3	front end wall	I	A
	.4	side wall	I	A
	.5	base	I	A
	.7	roof	I	A
	.8	insulation	I	A
	.9	plates (CSC and CCC)	I	A
	.10	marking	I	A
4	Thermal engineering calculation[4]		II	Ag
5	Drawings indicating dimensions and used materials of (if this information is not on the assembly drawings):			
	.1	corner and intermediate posts	II	A
	.2	upper longitudinal, end and intermediate beams	II	A
	.3	lower longitudinal, end and intermediate beams	II	A
	.4	element to which the CCC requirements apply	II	A
	.5	floors (fastening, sealing, dimensions of plywood, boards and configuration of their edges)	II	A

№	Document name		Set[1]	Review result[2]
	.6	doors with seals	II	A
	.7	door locks	II	A
	.8	cargo securing devices	II	A
6	Information about the manufacturer, model, purpose and characteristics of the refrigeration and / or heating installation		II	FI

[1] In case of submission of technical documentation in parts, documents marked with the number (I) should be submitted with the first part. Documents marked with the number (II) may be submitted with the second and subsequent parts. The volume of technical documentation provided with the first part may be changed upon the agreement with RS.
[2] A – approved; Ag – agreed; FI – for information. If necessary, the documents may be approved and/or agreed subject to the implementation of the comments of the RS letter.
[3] RS may additionally request documents on the floor materials and antiseptic impregnation, coatings and sealing materials used.
[4] Except for thermally insulated containers.

N o t e s : 1. Specified in this table documents may not be provided upon the agreement with RS, if all necessary information is contained in other documents, included in the set of technical documentation.
2. Documents containing information about structural elements that are not applicable to a specific container are not submitted to RS.

1.4.2 For approval of the refrigerating and/or heating plants the following documentation shall be attached to the request:

.1 technical conditions (technical specification), drawings of cooling circuit and drawings of the refrigerating and/or heating plants with indication of thermal, mechanical and other characteristics;

.2 specification of electrical equipment with parameters of circuit breakers, control and indication facilities, drawings of plug and socket connections, operating diagrams;

.3 specification, diagrams and drawings of electrical power source with its prime mover;

.4 test program for a prototype and type-series refrigerating and/or heating plants.

2 TECHNICAL REQUIREMENTS

In addition to the requirements contained in this Section, the thermal containers shall meet the requirements of Section 2, Part I "Basic Requirements".

2.1 INTERNAL DIMENSIONS

2.1.1 The minimum internal dimensions of thermal containers are given in Table 2.1.1.

Table 2.1.1

Detailed type code (ISO 6346)	Minimum length[1, 2] = nominal external containers length minus	Minimum width[2]= nominal external containers width minus	Minimum height[1, 2] (without gooseneck tunnel) = nominal external container height minus	Minimum height[1, 2] (with "gooseneck" tunnel) = nominal external container height minus
H0/HA, R0/RA, R1/RB, R5/RM, R7/RW	690	220	345	385
H1/HB, R2/RD, R3/RG, R8/RX	990			
H0/HA	440			

[1] Some of the length and height dimensions specified will necessarily be used for air circulation.
[2] Containers internal dimensions can deviate from above minimums due to operational or other requirements.

2.2 DOOR OPENING

2.2.1 Each container shall be provided with a door opening at least at one end.
2.2.2 The usable width shall correspond with the appropriate minimum internal dimension given in Table 2.1.1.
2.2.3 The usable height shall be as close as practicable to the appropriate minimum internal dimension given in Table 2.1.1.

2.3 DOORS

2.3.1 Requirements to the doors are outlined in 2.3, Part II "General Freight Containers".

2.4 FLOOR

2.4.1 Thermal containers with the air circulation system shall have a method for distributing air in the floor, including the T-floor. The floor shall have a minimum height as indicated in Table 2.4.1.

Table 2.4.1

Minimum floor height, mm	Container designation			
55	1EEE	1EE	–	–
55	1AAA	1AA	1A	1AX

Minimum floor height, mm	Container designation			
45	1BBB	1BB	1B	1BX
35	1CCC	1CC	1C	1CX
30	–	1DD	1D	1DX

2.4.2 Mechanical refrigerating unit (MRU) air circulation shall be capable of at least 50 container volume air changes each hour whilst operating on a 50 Hz power supply, taking the container volume from Table 2.1.1. It is not a requirement for fan operation to be continuous.

Airflow measurement should comply with the provisions of ISO 5801.

2.5 THERMAL CHARACTERISTICS

2.5.1 Thermal containers shall be so designed as to provide thermal characteristics indicated in Table 2.5.1, applicable to new containers.

Table 2.5.1

Detailed type code (ISO 6346)	Description	Maximum heat transfer[1] for new thermal containers U_{max} W/K									Operational[2,3,4] temperatures	
		1D, 1DD	1C, 1CC	1CCC	1B, 1BB	1BBB	1A, 1AA	1AAA	1EE	1EEE	inside °C	outside °C
H5/HM	Refrigerated (expendable refrigerant)	13	22	24	31	33	40	42	44	46	-30	+50
H8/HX	Eutectic, remote mechanical refrigeration	13	22	24	31	33	40	42	44	46	+30	-30
											-30	+50
R0/RA	Mechanically refrigerated	13	22	24	31	33	40	42	44	46	-30	+50
R1/RB	Mechanically refrigerated and heated	13	22	24	31	33	40	42	44	46	+30	-30
											-30	+50
R7/RW	Heated	13	22	24	31	33	40	42	44	46	+30	-30
R5/RM	Front mechanically refrigerated and heated	13	22	24	31	33	40	42	44	46	+30	-30
											-30	+50
R2/RD	Mechanically refrigerated, self-powered	13	22	24	31	33	40	42	44	46	-30	+50
R3/RG	Refrigerated and heated, self-powered	13	22	24	31	33	40	42	44	46	+30	-30
											-30	+50
R8/RX	Heated, self-powered	13	22	24	31	33	40	42	44	46	+30	-30
H0/HA	Refrigerated and/or heated, with removable equipment, unit located externally	13	22	24	31	33	40	42	44	46		
H1/HB	Refrigerated and/or heated, with removable equipment, unit located internally	13	22	24	31	33	40	42	44	46		

[1] The values of U_{max} for containers with insulation (type 1AAA) correspond to heat transfer coefficient ≤0,4 W/(m²-K).
[2] Enclosed electrical components in the control box unit shall not fail up to a temperature of + 85°C.
[3] Materials shall be capable of withstanding surface temperatures -30 °C to + 80 °C.
[4] In case MRU is not designed for -30 °C, the lowest design temperature specified by the manufacturer may be selected instead.

2.5.2 The heat transfer values are determined upon the test results of the prototype container in compliance with 3.5. If necessary, for containers in service the heat transfer value shall be confirmed

2.6 REQUIREMENTS FOR ADDITIONAL (OPTIONAL) EQUIPMENT

2.6.1 Drainage system.

2.6.1.1 The bottom portion of the container may be fitted with drainage system complying with the following requirements:

.1 the drainage system, if required to operate when carrying cargo, shall have suitable fittings with a sealing mechanism, which open automatically above normal internal operating pressure;

.2 if required for cleaning of the interior of the container, the drainage system fittings shall ensure water drainage from the container upon its cleaning and shall be provided with manual opening-closure;

.3 the design of the draining system shall comply with the requirements of the Rules for the Approval of Containers for the Transportation of Goods Under Customs Seal.

2.6.2 Water cooling system.

2.6.2.1 For equipment requiring water cooling, inlet and outlet connections shall be in accordance with the requirements of ISO 1496-2.

2.6.2.2 Such equipment shall be provided with drainage facilities to prevent water from freezing when draining the container.

2.6.2.3 Inlet and outlet connection of the water cooling system shall be so located at the machinery end of the container that they appear in the lower right-hand quarter to an observer facing that end.

2.6.3 Ventilation system.

2.6.3.1 Air openings for the ventilation of the internal volume of a container shall have closures readily accessible from outside.

2.6.3.2 The air circulation openings of 1AA, 1CC and 1C containers, where removable equipment is used for refrigerating or heating of the container, shall comply with the following requirements (refer to Fig. 2.6.3.2):

.1 the bosses for holes shall be minimum 457 mm in diameter or square for 1CC and 1C containers and minimum 550 mm for 1AA containers;

.2 the face of bosses shall be smooth with a tolerance of 0,25 mm on the parallel plane of the front faces of corner fittings;

.3 a clearance of 3 to 6 mm shall be provided between the plane of the front faces of corner fittings and the face of bosses;

.4 the bore of the hole shall be not less than 254 mm in diameter for 1CC and 1C containers and not less than 350 mm for 1AA containers;

.5 the holes shall have closures that comply with the requirements of the Rules for the Approval of Containers for the Transportation of Goods Under Customs Seal.

The size of openings and their location for containers of other designations shall be specially considered by the Register in each particular case.

2.6.3.3 Each inlet of the ventilation system shall be correspondingly and clearly marked.

2.6.4 Additional sockets for removable equipment.

2.6.4.1 If the containers are designed for removable equipment, the sockets for it shall be designed and located as shown in Fig. 2.6.4.1 (the example for a container size of 9´6˝).

2.6.4.2 Each socket for attaching a removable power generator set shall be designed to withstand the load of 17,8 kN applied in the vertical and horizontal directions in compliance with ISO 1496-2.

2.6.4.3 Installation of removable equipment for diesel generator shall not interfere with lifting of a container.

2.6.5 Equipment for hanging cargo.

2.6.5.1 The equipment for hanging cargo shall withstand the loads indicated in 3.2.2.

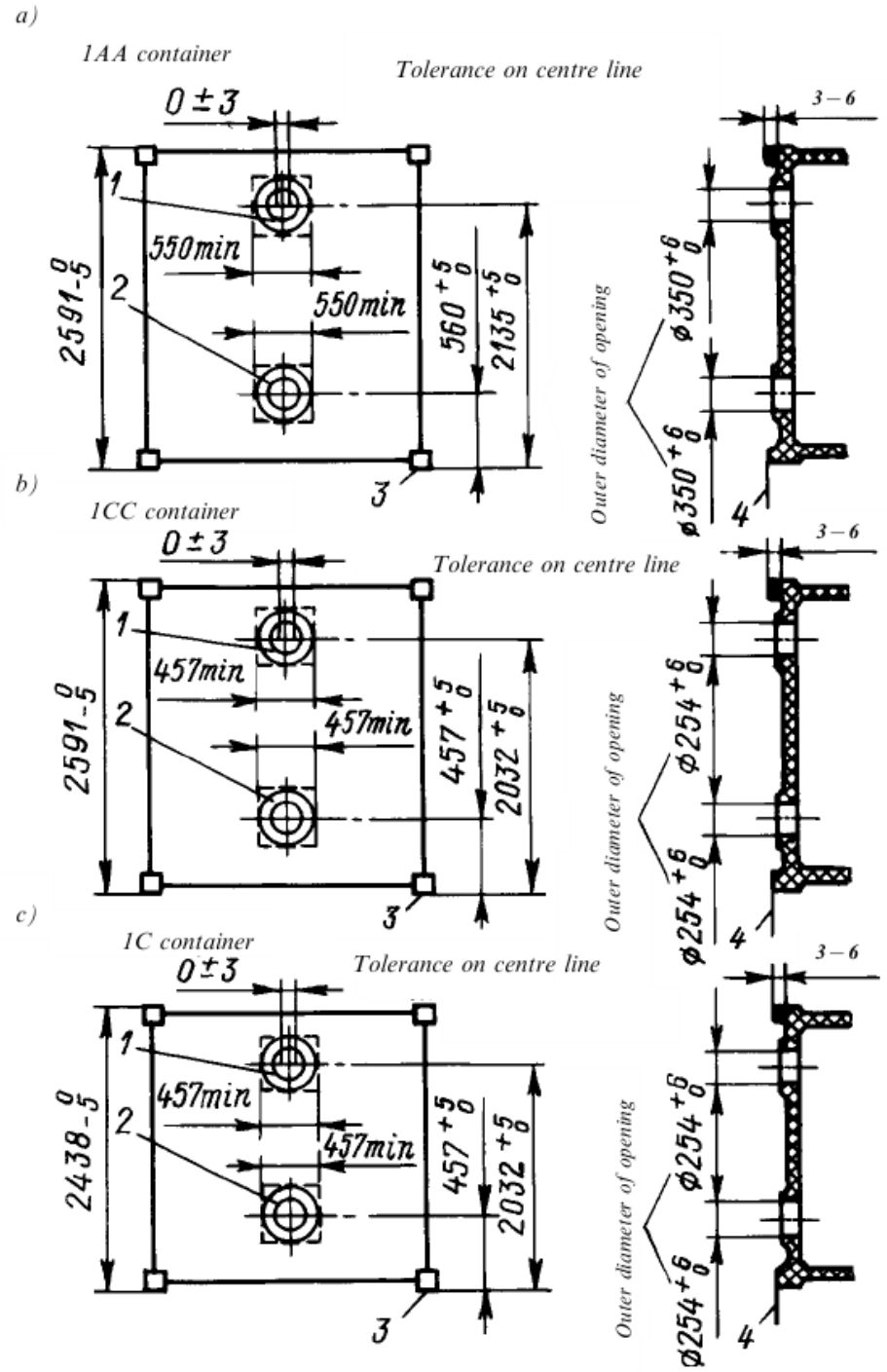

Fig. 2.6.3.2
Air openings in end wall (front and lateral view) of 1AA, 1CC and 1C containers, mm:

1 – air outlet hole; *2* – air inlet hole; *3* – bottom face of bottom corner fitting; *4* – front face of bottom corner fitting

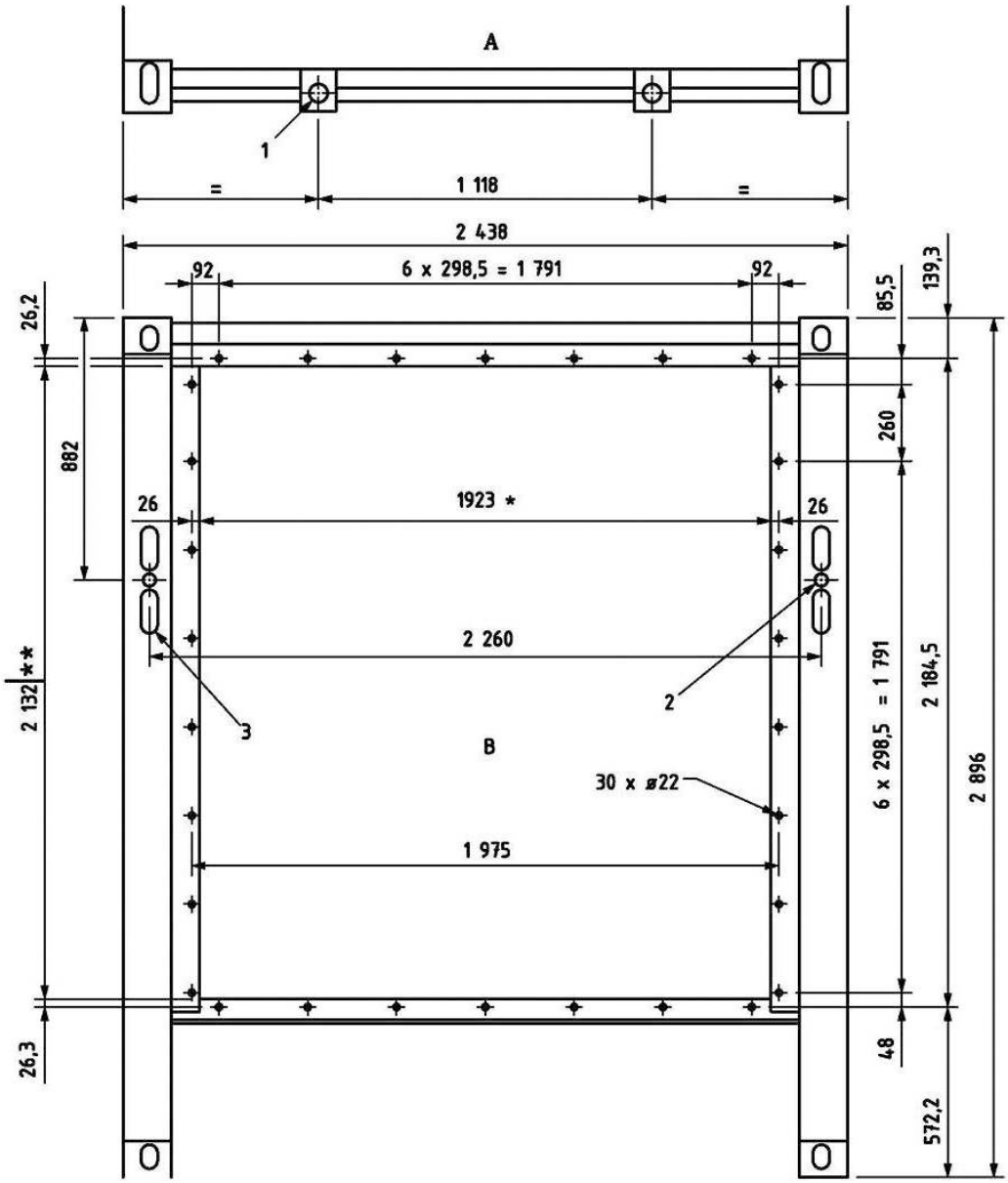

Fig. 2.6.4.1:

1 – diesel generator set mounts; *2* – diesel generator set nuts; *3* – 4 raised of diesel generator spacers;
A – top view; *B* – end view; * – opening width; ** – opening height

2.7 MATERIALS

2.7.1 Materials used for manufacture of the bearing structure of a container shall meet the requirements of Section 3.2, Part I "Basic Requirements".

2.7.2 Materials used for manufacture of a container, as well as its refrigerating and heating equipment shall not have an adverse effect on the cargo carried (especially, on the foodstuffs).

2.7.3 The inner surface of the thermal container shall meet the following requirements:

.1 the inner surfaces, as far as practicable, shall be plane and shall not permit moisture to accumulate;

.2 the inner surfaces shall be resistant to steam, detergents and disinfectants;

.3 the inner surfaces shall be fully accessible to normal cleaning and disinfecting procedures.

2.7.4 Thermal containers shall have their outer and inner surfaces light-coloured (white, light-grey, silvery, etc.).

2.7.5 The insulating materials of a container shall ensure heat conductivity determined from Table 2.4.1, be non-hygroscopic, as far as practicable, and have physical and chemical resistance, remaining at the same time neutral to the materials with which they are in contact.

2.7.6 The insulation of a container shall be covered with a lining of adequate strength to protect the insulation during container handling operations.

2.8 REFRIGERATING AND HEATING PLANTS

2.8.1 The requirements of this Chapter cover the refrigerating plants employing refrigerating compressor working on R134A or R404 refrigerants. The use of refrigerating plants of other designs or compressors with refrigerants other than stated above is subject to special consideration by the Register in each particular case.

Toxic, flammable and aggressive refrigerants shall not be used in refrigerating plants of containers.

2.8.2 The refrigerating plant of a container:

.1 shall be fitted with a hermetically or semi-hermetically sealed compressor;

.2 shall be air cooled;

.3 shall be designed for continuous running and have a capability sufficient to maintain the working temperature inside the container at the maximum outside temperature specified in Table 2.5.1, when running not more than 18 h a day;

.4 shall have all the equipment fully automated, inclusive of defrosting devices;

.5 shall have reliable overpressure protection with the pressure-relief devices located outside the internal volume of the container;

.6 shall include precautions to prevent freezing of the elements of the automatic control devices;

.7 shall be fitted with hand controls operable from a readily accessible position;

.8 shall withstand vibration and impacts during conveyance by different modes of transport.

2.8.3 Provision shall be made in the container for fitting of at least one thermometer to control the operation of refrigerating plant and also for measurements to be taken by a test thermometer.

2.8.4 If the internal combustion engine is used as a refrigeration plant prime mover, the following conditions shall be met:

.1 the engine shall run on fuel with a flash point not less than 55 °C;

.2 the fuel tank shall be provided with draining arrangements and a level gauge;

.3 the air pipe shall be fitted with a flameproof head;

.4 to prevent restarting the engine shall be shut down automatically when the fuel level in tank is minimum;

.5 the exhaust pipe of the engine shall be fitted with a spark arrester;

.6 the engine shall be started up freely at least at a temperature of –10 °C.

2.8.5 A refrigerated container with expendable refrigerant shall be fitted with arrangements for draining the rest of refrigerant after consumption.

2.8.6 A heating plant shall meet the requirements applicable to a refrigerating plant with respect to capacity, operation and safety.

2.9 ELECTRICAL EQUIPMENT

2.9.1 Electrically powered equipment.

It is permissible to use in containers such equipment which is operating from electrical power sources with characteristics as follows:

3-phase current with voltage of 360 to 460 V at a frequency of 50 Hz;

3-phase current with voltage of 400 to 500 V at a frequency of 60 Hz.

2.9.2 General requirements.

2.9.2.1 The electrical equipment shall operate reliably at frequency variations from nominal values within + 2,5 %.

2.9.2.2 The total power of electrical equipment under rated operating conditions shall not exceed 15 kW (18,75 kVA).

2.9.2.3 Equipment shall be provided with means for protecting the temperature-control apparatus against electrical overloads.

2.9.2.4 The plugs and metallic casings of current carrying equipment shall be earthed. All current-carrying parts shall be shielded against accidental contact. The insulation resistance of the electrical equipment shall be not less than 1 MOhm.

2.9.2.5 All electrically live metal parts shall be protected from accidental contact.

2.9.2.6 All non-current-carrying metallic components in a plug assembly shall be earthed.

Cable connections to live pins of the plug shall be protected against abrasion, strain and twisting. The protection shall be designed in such a way that the live pins cannot touch accessible metal parts of the plug case.

2.9.2.7 A wiring diagram shall be mounted on the equipment in a readily accessible place.

All wires shall be identified by marking (for example, colour coding) to correspond with information on the wiring diagram.

2.9.2.8 The equipment shall be provided with a nameplate including the following data as a minimum requirement:

3-phase current voltage, V;

frequency, Hz;

rated current, A;

total starting current, A.

2.9.3 Cables.

2.9.3.1 A flexible power cable of adequate cross-section area shall be provided to supply the equipment of the container from an external source of electrical power, which shall be permanently attached to the refrigeration and/or heating plant at one end and shall have a male plug at the other end. A minimum cable length or extension cable length shall be 18 m.

2.9.3.2 The equipment shall be provided with a 32 A four-pin (three poles plus earth) male plug.

The plug connection design shall ensure IP 67 protection.

2.9.3.3 The plug shall be sealed to the power cable by suitable means so as to prevent moisture ingress under service conditions.

2.9.3.4 A flexible power cable shall be stored in a well ventilated space used solely for this purpose.

2.9.3.5 Electrical equipment of the container when supplied from an external source of power shall operate with clockwise phase rotation A(R), B(S), C(T), according to a scheme presented in Fig. 2.9.3.5.

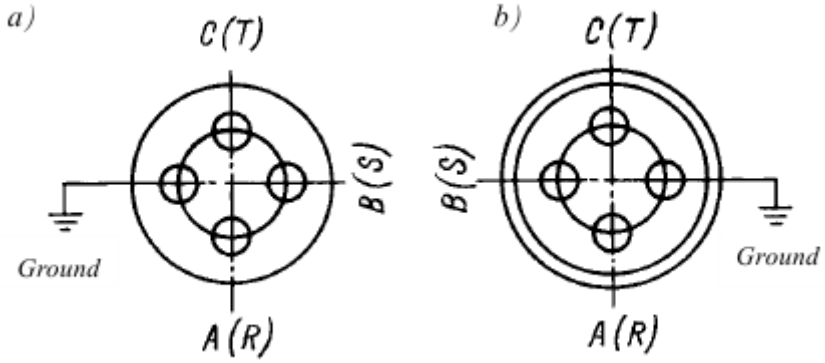

Fig. 2.9.3.5
Phase connections to container plugs and sockets (front view):

a – plug; *b* – socket

2.9.4 Plug and socket connections.

The design and dimensions of plugs and sockets shall comply with accepted national and international standards.

2.9.5 Switch gear, control and protection devices.

2.9.5.1 The equipment controls shall be located in accessible positions, be easy for operation and be adequately protected against mechanical damage.

2.9.5.2 Controls shall include an easily accessible and clearly marked ON/OFF switch on the outside of the equipment which prevents operation of the unit when in the OFF position. Whenever the unit's ON/OFF switch is in the ON position, an indicating light shall be illuminated which shall be different in colour from other unit's lights.

2.9.5.3 With the switch in ON position the electrical equipment shall operate automatically under cooling or heating conditions.

2.9.5.4 The control devices and electric motors shall be so designed that the total starting current is as low as possible and it shall in any case not exceed 150 A. The peak starting current shall be defined as the instantaneous mean of the sum of the currents of switched-on electric motors and the current taken by nonrotating elements. It is permissible for the total starting current of the multimotor equipment to be limited to the specified value to use sequence controls permitting the sequence starting of several motors.

2.9.5.5 The starting current shall decay to 125 % of the rated operating current in not more than 1 s.

2.9.5.6 The switch gear shall be fitted with protective devices against overloads and short circuits.

3 TESTING

3.1 GENERAL

3.1.1 Irrespective of the design, dimension and material chosen for manufacture of a thermal container, all types of thermal containers shall be subjected to test loads and testing procedures outlined in 3.1.5 and 3.2 through 3.7, with prescribed dimensions and tare mass to be determined according to 3.17, Part II "General Freight Containers".

3.1.2 Refrigerated and/or heated containers may be tested without cooling and/or heating plants unless otherwise specified for particular tests. In this case, the capability of the framework and other components of cooling and/or heating plants to withstand loads and accelerations arising in operation of containers shall be confirmed separately.

3.1.3 Where refrigerated and/or heated containers are subjected to strength tests without the cooling and/or heating plant, the latter shall be substituted by the appliance of an equivalent mass and strength characteristics not exceeding the strength of the missing equipment and attached in the same way.

3.1.4 Upon completion of each test, the container shall show neither permanent deformation nor abnormalities which may render it unsuitable for the designed purpose.

3.1.5 The test loads and testing procedures for thermal container lifting, stacking, floor strength, racking, longitudinal restraint (static test), strength of end and side walls, lifting by fork lift pockets are specified in Section 3, Part II "General Freight Containers".

Thermal containers shall be tested ready-assembled with insulation and ventilation equipment (if applicable).

3.1.6 The measuring equipment used in tests shall be certified by a competent authority and shall have percentage error not exceeding the values specified in 5.11.1.4 of the Rules for Technical Supervision during Manufacture of Containers, Materials and Products for Containers.

3.1.7 For refrigerated containers with expendable refrigerant, as well as for containers fitted with a refrigerating plant and seats for clip-on equipment, additional tests are required: for checking the operating characteristics of the container with the running refrigerating plant at below zero and increased ambient temperatures, for checking the operating characteristics of the container with expendable refrigerant, for checking the strength of seats for clip-on equipment. The tests shall be carried out in compliance with the requirements of ISO 1496-2.

3.2 STRENGTH OF THE ROOF AND EQUIPMENT FOR HANGING CARGO

3.2.1 The roof testing procedure is outlined in Part II "General Freight Containers".

3.2.2 Where equipment for hanging cargo is used in a thermal container, it shall withstand an internal test loading of 30 kN per 1 m of the internal useful length of the container, or a double operating load per 1 m of the internal useful length, whichever is greater.

On completion of testing, the equipment for hanging cargo shall have no damages and deformations affecting its safe use.

3.3 WEATHERTIGHTNESS

3.3.1 The container subjected to testing shall be fitted with full number of equipment prescribed in specifications. The testing procedure and characteristics of the water stream are set out in 3.15, Part II "General Freight Containers". The test shall be carried out on door gaskets, external flanged connections, opening fitted with closing devices, as well as

refrigerating plants and their attachments to a container. Upon completion of the test the inner surfaces of the container shall be dry.

3.4 AIRTIGHTNESS

3.4.1 The airtightness test shall be carried out after completion of the tests stated in 3.1.5, 3.2 and 3.3, and prior to thermal test.

3.4.2 The test shall be performed at the temperatures outside and inside the container within the range of 15 to 25 °C under the standard atmospheric conditions.

3.4.3 During testing the outside and inside temperatures shall be stabilized within 3 °C of one another.

3.4.4 The container shall be fully fitted with the equipment in compliance with the container specification. The refrigerating and/or heating unit shall be fitted in proper location. Where the container is intended for use with removable equipment, the latter shall be removed and all connecting ports shall be closed. Doors, ventilation, drain and other openings shall also be closed.

3.4.5 The air duct to the container shall be fitted with a calibrated metering device to control the air supply, a pressure gauge and a flowmeter. The pressure gauge shall be connected to the container itself, outside the air supply system.

3.4.6 An excessive internal pressure equal to 250 ± 10 Pa shall be produced in the container.

3.4.7 After the pressure in the container reaches a steady-state value, the air flow required to maintain this pressure shall be recorded.

3.4.8 Measurement of air flow shall be taken during 30 min.

3.4.9 For all the thermal containers, with the exception of containers provided with additional door openings, determined for the standard atmospheric conditions, the air leakage shall not exceed 5 m³/h. For each additional door opening (e.g. for side doors), provision shall be made for an additional air leakage equal to 5 m³/h.

3.5 THERMAL TEST

3.5.1 The thermal test shall be carried out after completion of the airtightness test of the container (refer to 3.4). It shall be performed with the refrigeration and/or heating equipment in place, with all openings closed. Where the thermal container is designed for use with removable equipment and the container has closures at the interface(s), the equipment may not be in position and the closures shall be shut.

3.5.2 The heat transfer required to make up heat balance shall be determined only by internal heating method. A heating device shall be placed inside the (insulated) body of the container and thermal equilibrium shall be established between the power of the heating device(s) and associated fan(s), and the heat flowing out through the insulation. All instruments and devices shall record automatically. The power measuring device shall be of a continuously integrating type.

3.5.3 The heat transfer shall be determined as a total heat transfer to be derived by the formula

$$U_t = Q/(t_{in} - t_{out}) \qquad (3.5.3)$$

where U_t – total heat transfer, W/K;
t – mean average wall temperature, K;

$t = (t_{in} - t_{out})/2$;

Q – power dissipated by the operation of internal heaters and fans, W;

t_{in} – average temperature calculated as the arithmetic mean of the temperatures measured at least at 12 points inside the container (refer to Fig. 3.5.3-1) at the end of each test period, K (refer to 3.5.4);

t_{out} – average temperature calculated as the arithmetic mean of the temperatures measured at least at 12 points outside the container (refer to Fig. 3.5.3-2) at the end of each test period, K (refer to 3.5.4).

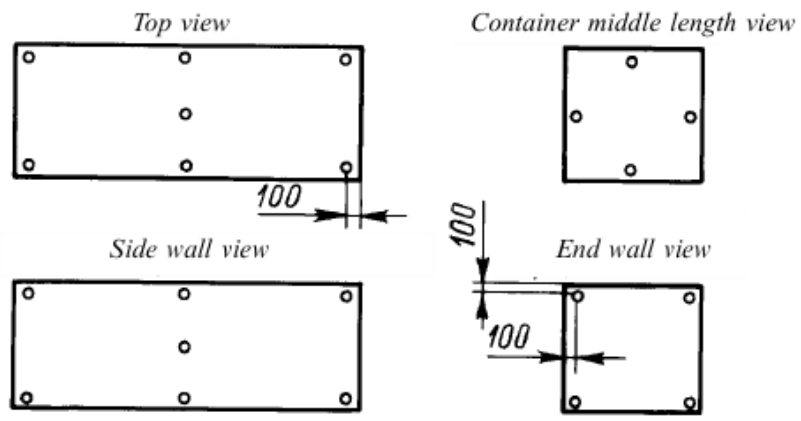

Fig. 3.5.3-1
Inside air temperature measurement points:

o – measurement point

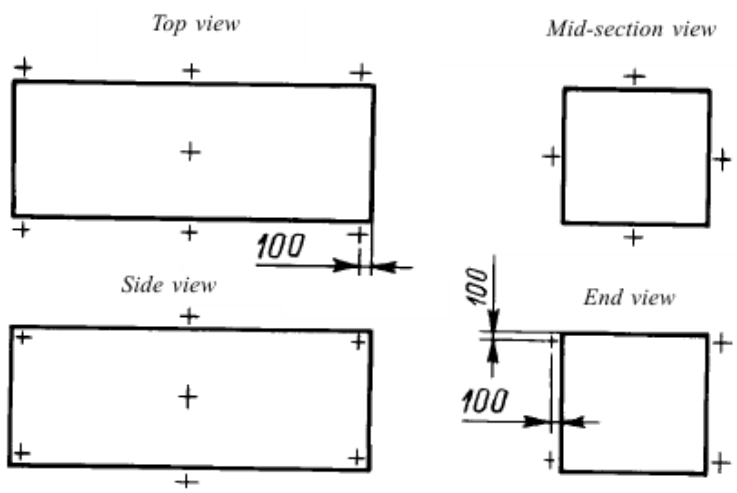

Fig. 3.5.3-2
Outside air temperature measurement points:

+ - measurement point

3.5.4 Measurements to determine the heat transfer of a container shall be taken uninterruptedly during 12 h and the following conditions shall be met:

.1 mean wall temperature shall be within a range of 293±0,5 K (20±0,5 °C) and the difference between the inside and outside air temperatures ($t_{in} - t_{out}$) shall be not less than 25±2 K (25±2 °C);

.2 the maximum difference between the highest and the lowest temperatures at any one time shall not exceed 2 K (2 °C) both for the outside and inside temperatures;

.3 the maximum difference between any two mean air temperatures inside and outside the container taken over a steady state period of 12 h shall not vary by more than ±0,3 K, and these temperatures shall not vary by more than ±1,0 K during the preceding 6 h;

.4 the mean inside and outside temperatures at the beginning and at the end of the calculation period of at least 6 h shall not differ by more than 0,2 K;

.5 the difference between heating power measured over two periods of not less than 3 h at the start and at the end of the steady state period, and separated by at least 6 h, shall be less than 3 %.

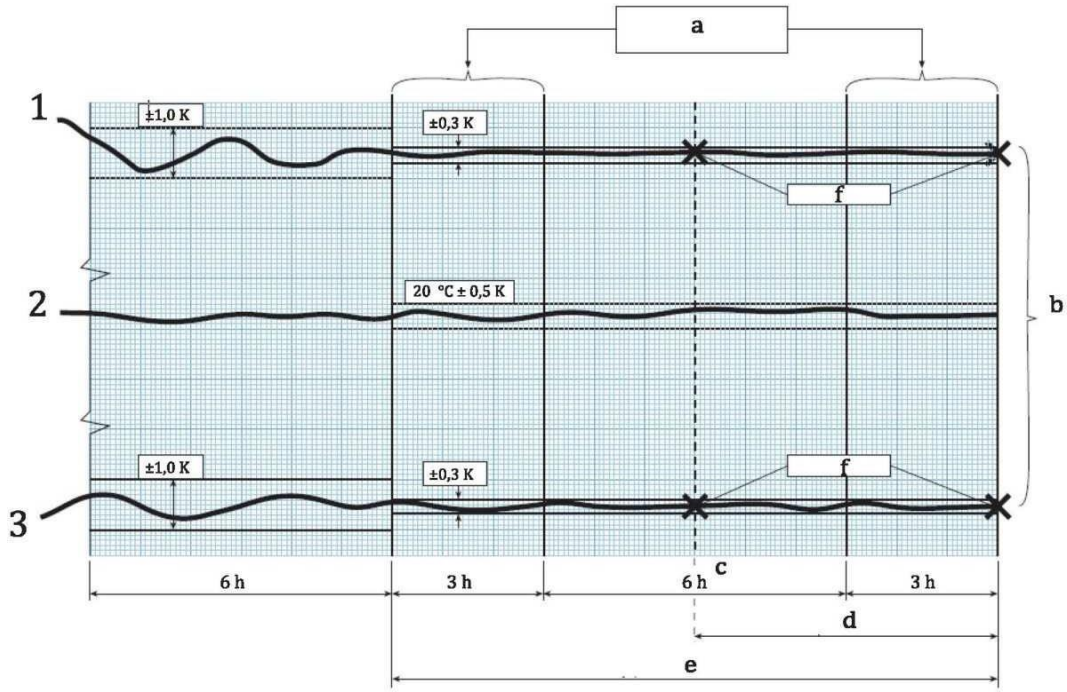

Fig. 3.5.4
Example of steady state conditions for heat leakage test

1 – mean internal temperature; 2 – mean wall temperature; 3 – mean external temperature;
a – difference of heating power to be within 3 %; b – DT to be (25±2) °C for the steady period;
c – at least; d – calculation period at least 6 hours; e – steady period at least 12 h; f – within 0,2 K

N o t e s : 1. The internal air flow shall ensure 40 – 70 air changes in the container per hour.
2. The external air flow shall be 1 – 2 m/s.
3. The maximum difference between temperatures at any 2 of 12 points internally or externally shall be ≤2 K during steady state period.

3.5.5 All the gauges and devices shall ensure accuracy of measurements indicated in 3.1.6 and the measurements shall be taken at not more than 15 min intervals.

3.5.6 Air current shall flow over the container surface with a speed of 1 – 2 m/s measured at points located approximately 100 mm away from the middle of container side walls and roof.

3.5.7 All temperature gauges fitted inside and outside the container shall be protected from radiation heat.

3.5.8 The heat transfer U, W/K shall be calculated as the arithmetic mean of the heat transfer values measured within at least 12 h under thermal equilibrium conditions, by the formula

$$U = \frac{1}{n}\sum_1^n U_t \qquad (3.5.8)$$

where n – number of measurement points; n ≥ 25.

The heat transfer value shall be recorded simultaneously with the mean wall temperature values obtained in the course of testing. The heat transfer value corrected for the standard mean wall temperature of 293 K (20 °C) shall also be recorded. The correction shall be made using a curve relating heat transfer to mean wall temperature relation. The heat transfer shall not exceed values given in Table 2.5.1.

3.5.9 Heat transfer coefficient, W/(m²·K) shall be calculated by the formula

$$k = U/S \qquad (3.5.9)$$

where $S = \sqrt{(S_{in}S_{out})}$ is the geometric mean of the container surface area, m².
S_{in} is the inner surface area without corrugations, m².
S_{out} is the outside surface area without corrugations, m².

3.6 CHECKING OF OPERATING CHARACTERISTICS OF MECHANICAL REFRIGERATING UNIT (MRU)

3.6.1 Where the thermal test shows positive results (refer to 3.5), the container fitted with permanent or removable mechanical refrigerating unit (MRU) shall be placed in a room with an air temperature consistent with this type of container (refer to Table 2.5.1).

3.6.2 After starting the refrigerating plant shall reduce the temperature inside the container to the temperature specified for that type of container (at outside temperature given in Table 2.5.1) and then maintain this temperature within 8 h provided that the heat load passes through the container walls and roof.

3.6.3 With the thermal stabilization period completed according to 3.6.2, the container heater (heaters) and fan (fans) fitted inside the container shall be turned on to produce additional heat load, W, equal to

$$Q = 0{,}35\, U_t(t_{in} - t_{out}) \qquad (3.6.3)$$

where U_t, t_{in}, t_{out} – refer to Formula (3.5.3).

3.6.4 In joint operation of the refrigerating plant and the equipment specified in 3.6.3, after restabilization of operating conditions, the temperature required in 3.6.2 shall be maintained inside the container within at least 4 hours.

3.6.5 During testing, the container shall be fitted with gauges to measure:

.1 air temperature at 12 points outside and inside the container (refer to Figs. 3.5.3-1 and 3.5.3-2);

.2 air inlet and outlet temperatures (dry bulb temperature sensor) inside the container (at least four sensors on each side);

.3 refrigerant temperature at the inlet of the outside air cooled condenser;

.4 power consumed by MRU, and separately by a heater inside the container;

.5 external air current at the midpoint of one of the side walls.

3.6.6 With the operating conditions of the refrigerating plant reached the steady state, the inside and outside temperatures, as well as the power consumed by the heater and fan shall be recorded at not more than 15 min intervals.

3.6.7 The temperature values shall meet the requirements of 3.5.4 and the heat transfer shall be determined by Formula (3.5.3).

3.6.8 On agreement with the Register, the above test of the refrigerating unit may be carried out separately from the container provided that the requirements of this Chapter are met.

3.7 CHECKING OF OPERATIONAL CHARACTERISTICS OF CONTAINERS AT HIGH TEMPERATURES USING MECHANICAL REFRIGERATING UNIT

3.7.1 This test determines the ability to preserve the operational characteristics of a container with installed MRU at an outside temperature of 50 °C. The container shall be fitted with measuring instruments in compliance with 3.6.5.

3.7.2 The test shall be carried out with an old (or simulated aged) container with a total heat transfer, U, of not less than the value determined by the formula

$$U = 1{,}2\ U_{max} \qquad (3.7.2)$$

where the value of U_{max} is taken from Table 2.5.1 for the type of the container.

3.7.3 The temperature outside the thermal container throughout the test may be below 50 °C, but shall be compensated to 50 °C by additional internal thermal load.

3.7.4 The inside temperature shall be set at two temperature levels, 12 °C and -30 °C.

N o t e . In case MRU is not designed for -30 °C, the lowest design temperature specified by the manufacturer may be selected instead.

3.7.5 The inside temperature set point shall be + 12 °C and the air temperature at condenser inlet shall be maintained at + 50 °C. These temperatures shall be maintained at steady state condition for a period of not less than 8 h and the following conditions shall be met:

.1 the inside air velocity shall be as produced by the evaporator fans at the speed designated for the set point temperatures;

.2 the T-floor shall be covered from the machinery side by 2/3 of the T-floor length;

.3 floor drains, defrost drains (where fitted) and vacuum valves shall be in their normal operational states, vent devices shall be closed.

3.7.5 The inside temperature set point shall then be set to -30 °C (refer to 3.7.4) and the air temperature at condenser inlet shall be maintained at 50 °C. Once these temperatures are established the evaporator shall be defrosted. Thereafter steady state condition shall be re-established and then maintained at steady state condition for a period of not less than 8 h.

3.7.6 During the period of steady state condition the inside and outside temperatures, the temperatures at the condenser air inlet side and the internal heater(s) and fan(s) power consumption shall be recorded at intervals not exceeding 15 min.

3.7.7 During the periods of steady state condition the MRU shall be capable of being operated without functional restrictions or disruptions.

3.8 CHECKING OF CONTAINER POWER CONSUMPTION AT DEFINED TEMPERATURES USING MECHANICAL REFRIGERATING UNIT

3.8.1 This test determines the ability to preserve the operating characteristics of a container with installed MRU at a determined outside temperature. The test is carried out with additional heat load to simulate passage of additional heat through the walls of the container.

3.8.2 The test shall be carried out using an aged (or simulated aged) container with a total heat transfer, U, of not less than the value determined by Formula (3.7.2).

3.8.3 The container shall be fitted with measuring instruments in compliance with 3.6.5.

3.8.4 The inside test temperature at set points of the refrigeration machinery controller shall be at a setpoint of three different levels: 14 °C, 0 °C and -18 °C:

at a temperature of 14 °C, the additional heat load is 1000 W;

at a temperature of 0 °C, the additional heat load is 200 W;

at a temperature of -18 °C, there is no additional heat load.

3.8.5 These temperatures shall be maintained in steady state condition for a period of not less than 4 h.

3.8.6 When testing, the following conditions shall be met:

.1 the average air temperature at condenser inlet shall be 25 °C for the duration of the test;

.2 outside temperatures of the thermal container during the test may be below 25 °C but shall be compensated to 25 °C by additional internal heat load;

.3 the conditions specified in 3.7.5.

3.8.7 During the period of steady state condition the power consumed by the MRU, the heater(s) and fan(s) shall be recorded at intervals not exceeding 15 min.

4 MARKING

4.1 MANDATORY MARKING

4.1.1 Thermal containers shall be marked in accordance with the requirements set out in Section 4, Part I "Basic Requirements".

4.1.2 If a thermal container is fitted with equipment for hanging cargo, the maximum carrying capacity of that equipment shall be legibly marked inside the container.

4.1.3 Thermal containers designed for use with the variable air inside the container, which may be hazardous for health until the complete ventilation of a cargo space, shall have the corresponding marks of the oxygen deficiency danger in way of each place of access inside the container. Identification marking symbols are given in ISO 7010.

4.1.4 If the thermal container has an automatic ventilation control system, the corresponding mark shall be placed at air inlets.

4.1.5 Thermal containers with an air circulation system should have a load line clearly marked to ensure return of air to the MRU. It is recommended that the load line be at least 100 mm from the roof for 40’ container and 70 mm for a 20’ container.

4.2 IDENTIFICATION PLATE WITH PLANT'S DATA

4.2.1 The refrigerating and/or heating plants shall bear at a conspicuous place a plate containing technical particulars of the plant.

4.3 INSTRUCTIONS

4.3.1 In immediate proximity to the switches, controls and indicating devices of the refrigerating and/or heating plants, there shall be posted the operation instructions so arranged and fastened as to make them fit for continuous use. These instructions shall be written both in the national and the English languages.

PART IV. TANK CONTAINERS

1 GENERAL

1.1 APPLICATION

1.1.1 The requirements of this Part apply to tank containers designed for the transportation of pressurized liquids, liquefied gases and dry bulk cargoes with test pressure above 0,045 MPa.

1.1.2 The requirements of this Part also apply to offshore tank containers handled in open seas and to tank containers of the swap body type, and tank containers with a fiber-reinforced plastic (FRP) shell, where applicable.

1.1.3 Tank containers shall comply with the requirements of Part I "Basic Requirements", and with the requirements of this Part.

1.1.4 Tank containers differing in design and dimensions from those defined in this Part are subject to special consideration by the Register in each case.

1.1.5 Additional international and national requirements specified by competent authorities may apply to tank containers used for the transportation of dangerous goods.

1.2 DEFINITIONS AND EXPLANATIONS

1.2.1 The definitions and explanations relating to the general terminology of these Rules are given in 1.1 of the General Regulations for the Technical Supervision of Containers. For the purpose of this Part the following definitions and explanations have been adopted.

Holding time means the time that will elapse from the establishment of the initial filling condition until the pressure has risen due to heat influx to the lowest set pressure of the pressure-limiting device(s).

Gas means a substance that:

at 50 °C, has a vaporization pressure of more than 0,3 MPa;

at 20 °C and normal pressure of 0,101 MPa, is absolutely gaseous.

Liquid means a substance, which:

at 50 °C, has a pressure of saturated vapours of not more than 0,3 MPa;

at 20 °C and a pressure of 0,101 MPa is not absolutely gaseous;

at pressure of 0,101 MPa has a melting temperature or thaw point of 20 °C or below.

Test pressure is the inside gauge pressure that is built up in the tank in the course of hydraulic tests. The test pressure is measured in the top part of the tank.

Tank container means a freight container that includes the framework (frame members) and a tank or tanks completed with service equipment in compliance with the requirements of this Part either for gravity or pressure loading and discharge.

Note. Tank container is covered by the definition "Portable tank" when its structure meets the requirements of 6.7 of the UN and IMDG Code Type Regulations.

Maximum allowable working pressure (MAWP) means a pressure (gauge) to be defined as the highest pressure of the following values:

the maximum allowable filling or draining pressure;

the maximum pressure which can be built up in the tank under the effect of the cargo contained in the tank (including foreign gases which can be present therein).

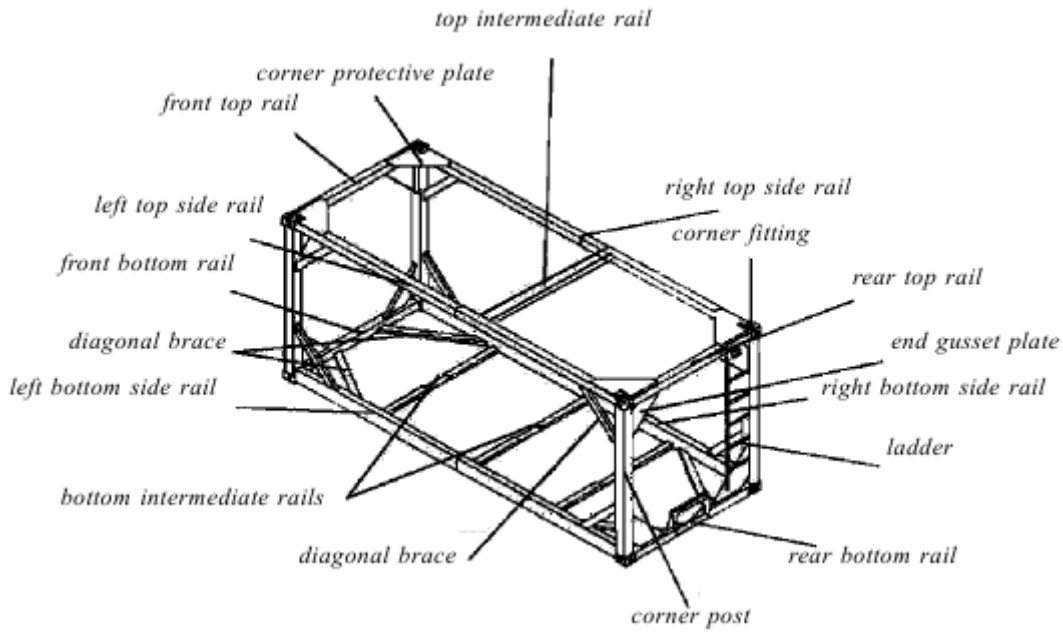

Fig. 1.2-1
Structural elements of the tank container frame

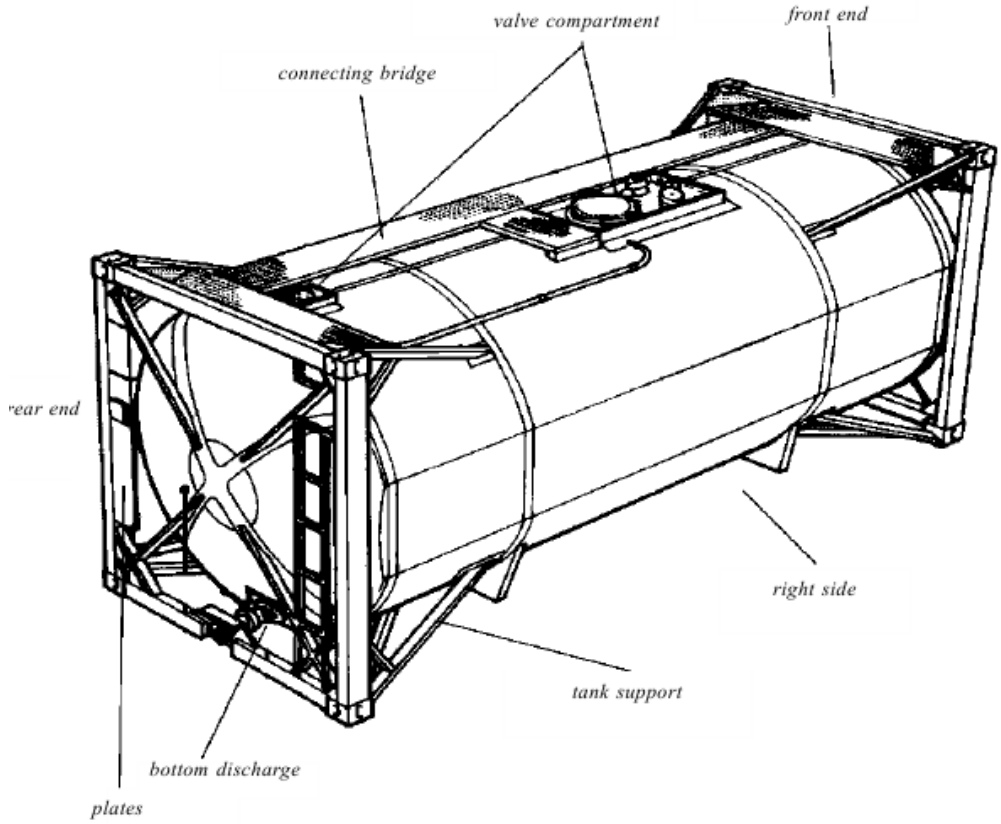

Fig. 1.2-2
Beam tank container structure

Minimum design temperature (for tank containers intended for transportation of refrigerated liquefied gases) means the temperature that is used for the design and manufacture of the tank shell not higher than the lowest (coldest) temperature (service temperature) of the contents during normal conditions of filling, discharge and transport.

Ullage means the portion of the total capacity of the tank not occupied by its cargo, expressed as a percentage value of the total capacity.

Non-dangerous goods are those substances which are not covered by the Code of the UN Committee of Experts on the Transportation of Dangerous Goods and/or national normative documents.

Total capacity means that volume of water which will completely fill the tank at 20 °C.

Dangerous goods are those substances which are covered by the Code of the UN Committee of Experts on the Transportation of Dangerous Goods and/or the national normative documents.

Compartment means a fluid tight section of the tank formed by the shell, ends and/or tight partitions.

Liquefied refrigerated gas means a gas pressurized for transport, which is partially liquid at reduced or cryogenic temperatures.

Design pressure is the pressure used for the vessel strength calculation.

Design temperature range for the tank shell means a temperature interval from -40 °C to 50 °C for substances transported at ambient temperatures. For substances transported at high temperatures, the design temperature shall be not less than the maximum temperature of the substance during filling, discharge or transportation. More severe design temperatures shall be considered for tank containers operated at temperature below -40 °C.

Jacket means the outer insulation cover or cladding of tank container intended for transportation of refrigerated liquefied gases, which may be part of the insulation system.

Service equipment means measuring instruments, filling, discharge, ventilation, safety, heating and thermal insulation devices.

Liquefied gas means a gas pressurized for transportation, which is partially liquid at temperatures above minus 50 °C.

Design reference temperature (for tank containers intended for transportation of nonrefrigerated liquefied gases) means the temperature, at which the vapour pressure of the contents of the tank is determined for the purpose of calculating maximum allowable working pressure.

Design reference temperature shall be less than the critical temperature of the non-refrigerated liquefied gas intended to be transported to ensure that the gas is liquefied at all times.

Reference steel means steel with fixed minimum guaranteed tensile strengthR_m, equal to 370 MPa and minimum guaranteed elongation A_5, equal to 27 %. Mechanical properties of the reference steel are used only for calculations by Formula (2.2.8).

Vessel (tank) is an integral part of a portable tank (tank container), which contains substance intended for the transportation, including openings and their closures, but not including service equipment or external structural equipment.

Portable UN tank is a tank with a capacity above 450 l designed for multi-modal transportation of Class 1 – 9 hazardous substances. A portable tank consists of a vessel with service equipment and structural equipment necessary for the transportation of hazardous substances. The design of a portable tank shall provide the possibility of its filling and emptying without removal of its structural equipment. The tank shall possess stabilizing members external to the tank, and shall be capable of being lifted when full. It shall be designed primarily for loading onto a vehicle or a ship and shall be equipped with skids, mountings or accessories to facilitate mechanized handling.

1.3 SCOPE OF TECHNICAL SUPERVISION

1.3.1 Technical supervision of the Register shall cover:
.1 framework, frame members (bearing structure);
.2 corner fittings;
.3 tank and tank outer shell, if any;
.4 pressure units, cooling and heating appliances for cargo, if provided;
.5 safety devices (pressure-relief valves, frangible disks, fusible elements and vacuum valves);
.6 piping;
.7 stop valves;
.8 liquid level indicators;
.9 materials for the manufacture of tank, shell, framework and fastening elements to frame.

1.4 TECHNICAL DOCUMENTATION

1.4.1 The scope of the technical documentation, submitted for consideration, as well as the forms for confirming the compliance of the technical documentation with RS requirements, are specified in Table 1.4.1 and may be changed upon the agreement with RS.

Table 1.4.1

№		Document name	Set[1]	Review result[2]
1	Technical conditions or technical specification		I	A
2	Instruction (manual) for operation		II	Ag
3	Calculation of:			
	.1	tank container for strength in accordance with the requirements of 2.2.3 (including 2.2.4), by the finite element method or by another method that ensures the reliability of the results obtained	I	Ag
	.2	shell for strength in accordance with the requirements of 3.7, by the finite element method or by another method that ensures the reliability of the results obtained [1]	I	Ag
	.3	shell for strength in accordance with the requirements of national and/or international standards applicable to pressure vessels and applicable to tank containers	I	Ag
	.4	required flow capacity of safety devices in accordance with the requirements of 6.7 of the IMDG Code	I	Ag
	.5	thermotechnical, by method that ensures the reliability of the results obtained[3]	II	Ag
4	List of dangerous goods classes or list of goods (if required in the rules for the carriage of goods, national or international regulations) that can be transported in tank container[4]		II	FI
5	Program of:			
	.1	static testing of the prototype, if testing will be carried out at the manufacturer	II	A
	.2	thermal tests (determination of the control retention time and the effectiveness of the insulation system), if the tests will be carried out at the manufacturer[5]	II	A

№	Document name		Set[1]	Review result[2]
6	Assembly drawing of:			
	.1	tank container	I	A
	.2	shell	I	A
	.3	side and end walls	I	A
	.4	stiffening rings	II	A
	.5	cargo cooling and/or heating systems	II	A
	.6	spill box, if several and different, then each	II	A
	.7	ladder	II	A
	.8	walkways	II	A
	.9	insulation	II	A
	.10	handrails	II	A
	.11	plates (shell date, CSC and CCC)	I	A
	.12	marking	I	A
7	Drawings indicating dimensions and used materials of (if this information is not on the assembly drawings):			
	.1	corner and intermediate posts	II	A
	.2	attachment points of shell with frame	II	A
	.3	upper longitudinal, end and intermediate beams	II	A
	.4	lower longitudinal, end and intermediate beams	II	A
	.6	manlids and necks (when manufactured at the manufacturer of the tank container)	II	A
	.7	element to which the CCC requirements apply	II	A
	.8	pipelines	II	A
8	Scheme with the scope of control of welded joints		II	Ag

[1] It is allowed not to carry out calculations of the shell for strength in case of strain measurement during testing of the shell for strength. If the calculation has been performed, then for thin-walled tank containers (T1 — T22), the strength test can be carried out without strain gauges.
[2] RS may additionally request documents confirming the resistance of the materials of the tank container, its fittings and seals to cargo.
[3] For tank container intended for the transportation of refrigerated liquefied gases.

[4] In case of submission of technical documentation in parts, documents marked with the number (I) should be submitted with the first part. Documents marked with the number (II) may be submitted with the second and subsequent parts. The volume of technical documentation provided with the first part may be changed upon the agreement with RS.
[5] A — approved; Ag — agreed; FI — for information. If necessary, the documents may be approved and/or agreed subject to the implementation of the comments of the RS letter.

N o t e s : 1. Documents specified in this table may not be provided upon the agreement with RS, if all necessary information is contained in other documents, included in the set of technical documentation.
2. Documents containing information about structural elements that are not applicable to a specific container are not submitted to RS.

2 TECHNICAL REQUIREMENTS

2.1 BASE STRUCTURE

2.1.1 When the tank container is loaded to its gross mass R, no part of the tank vessel and its associated shell fittings shall project downwards below a plane that is 25 mm above the base plane (bottom faces of the bottom corner fittings).

This requirement does not apply to load-transfer areas if they are located on the tank vessel.

2.1.2 All tank containers, other than 1CCC, 1CC, 1C, 1CX, 1D and 1DX, shall have load-transfer areas in their base structure to permit vertical load transfer when carried on chassis. 1CCC, 1CC, 1C and 1CX tank containers may have load-transfer areas in their base structure as an optional feature. If so, these tank containers shall meet the requirements of 2.3, Part I "Basic Requirements".

2.2 TANKS, SUPPORTS AND ATTACHMENTS

2.2.1 The tanks shall be designed and constructed in accordance with the extending to pressure vessels national and/or international standards and these Rules. The tank strength shall be calculated in compliance with the requirements of national and/or international standards and rules.

2.2.2 A tank or tanks shall be firmly secured to structural elements of the tank framework. Supports and attachments of the tank to the framework shall be such as not to cause dangerous local stress concentrations in the tank shell.

2.2.3 The tank, supports and attachments when loaded to the maximum allowable gross mass R, shall withstand the following static forces applied separately:

.1 in the moving direction: doubled gross mass R multiplied by the acceleration of gravity g $(2Rg)$.

In design of tank containers for dangerous goods, strength of the tank, supports and attachments shall be additionally tested by the static forces in the longitudinal direction equal to $4Rg$;

.2 horizontally at a right angle to the moving direction: gross mass R multiplied by the acceleration of gravity g (Rg). If the direction of movement is not exactly determined, then the loads shall be taken equal to $2Rg$;

.3 vertically upwards: gross mass R multiplied by the acceleration of gravity g (Rg);

.4 vertically downwards: doubled gross mass R multiplied by the acceleration of gravity g $(2Rg)$.

2.2.4 The following safety factors used for determining of allowable stress shall be provided at each of the above loadings:

for metals with a distinct yield plateau: safety factor of 1,5 with respect to the guaranteed minimum yield pointR_e;

for metals with a non-distinct yield plateau: safety factor of 1,5 with respect to the guaranteed conventional yield point R_{p1}or steels of austenitic class or $R_{p,02}$for steels of other classes.

At the loading of $4g$, the safety factor used for determining of allowable stress shall be taken equal to 1 with respect to the minimum assured yield point or R_{p1}, $R_{p,02}$.

2.2.5 The minimum thickness of shell and heads of a tank for reference steel shall be not less than 5 mm with $D_{ins.} \leq 1800$ mm and 6 mm with $D_{ins.} > 1800$ mm ($D_{ins.}$. = inside diameter of the tank).

2.2.6 If a provision is made for an additional tank protection and hydraulic test pressure is less than 0,265 MPa, the minimum thickness of the shell and heads in a tank constructed of standard steel may be reduced but shall not be less than 3 mm at $D_{ins.} \leq 1800$ mm and 4 mm with > 1800 mm. The additional protection may be afforded by:

continuous outer multiply protection of "sandwich" type;

double-wall construction of the tank;

mounting of the tank in a full scantling framework

2.2.7 The equivalent metal thickness other than the value specified for reference steel in 2.2.5 and 2.2.6 shall be determined by the formula

$$e_1 = \frac{21{,}4 \times e_0}{\sqrt[3]{R_{m1} \times A_1}} \qquad (2.2.7)$$

where
e_1 – required equivalent thickness of the steel to be used, in mm;
e_0 – minimum thickness for reference steel, in mm;
R_{m1} – guaranteed minimum tensile strength of the material used at the tensile test, in MPa;
A_1 – guaranteed minimum elongation of the metal used at the tensile test in compliance with the national and international standards, %.

2.2.8 For certain types of UN tanks, regardless of the size of the internal diameter of the vessel $D_{ins.}$, the minimum thickness of the walls and bottoms for reference steel shall be as follows:

8 mm for UN portable tanks those comply with UN T20;

10 mm for portable UN tanks that comply with UN T21 – UN T22 instructions.

In this case, the equivalent value of the thickness of the metal used shall be determined by the formula

$$e_1 = \frac{21{,}4 \times e_0 \times d_1}{\sqrt[3]{R_{m1} \times A_5}} \qquad (2.2.8)$$

where
e_1 – required equivalent thickness of the steel to be used, in mm;
e_0 – minimum thickness for reference steel, in mm;
d_1 – case diameter (in m), but not less than 1,8 m:
R_{m1} – guaranteed minimum tensile strength of the material used at the tensile test, in MPa;
A_5 – guaranteed minimum elongation of the metal used at the tensile test in compliance with the national and international standards, %.

2.2.9 In any case, the minimum thickness of shell and heads in a tank shall be not less than 3 mm, regardless of the material used for its construction.

2.2.10 Corrosion allowances shall be accepted in accordance with the requirements of the national and/or international standards.

2.2.11 The materials used for the manufacture of components parts and assemblies which are in contact, or may come in contact, with the cargo carried in the tank container shall be resistant to the effects of that cargo.

2.2.12 Vessel shell may be manufactured from fiber-reinforced plastic (FRP). Requirements for tank containers with FRP shells are given in Part VIII "Tank Container with a Fiber-Reinforced Plastic (FRP) shell".

2.2.13 Tanks or tank compartments with no vacuum relief devices shall be so constructed as to withstand an external pressure of at least 0,04 MPa above the internal pressure without permanent deformation and abnormalities that could render the tank container unfit for the designed purpose.

If tanks of tank containers intended for transportation of non-refrigerated liquefied gases shall be exposed to high external pressure before filling or during discharge, they shall be

designed to withstand external gauge pressure exceeding internal pressure not less than by 0,09 MPa and shall be tested by this pressure.

2.2.14 The ullage of a tank for liquids is to be determined depending on the kind of cargo carried; it shall, however, be minimum 2,5 % of total capacity at the ambient temperature of 50 °C. In no case the tank shall be fully filled at an ambient temperature of 55 °C.

For tanks intended for the transportation of gases, the maximum mass of liquefied gas per liter of a tank capacity shall not exceed the density of the liquefied gas at 50 °C multiplied by 0,95. Furthermore, the tank shall not be fully filled in at 60 °C.

Initial filling rate of tank containers intended for transportation of non-refrigerated liquefied gases (excluding helium), shall be such that if a temperature increases to the level at which a saturated vapour pressure is equal to the maximum allowable working pressure, then the volume occupied by the liquid does not exceed 98 %.

2.2.15 Tanks intended for the transportation of liquids with kinematic viscosity not exceeding 2680 mm²/s at a temperature of 20 °C shall be subdivided by baffle plates into sections with maximal capacity not exceeding 7500 l if the tank is filled by more than 20 %, but less than 80 % of its total capacity.

2.2.16 Tanks designed for the transportation of specific dangerous goods shall have no openings located below the level of cargo.

2.2.17 The welded seams of the tank container shall be inspected in the scope agreed with the Register. The minimum amount of control is specified in 5.10 of the Rules for Technical Supervision during Manufacture of Containers, Materials and Products for Containers.

2.3 ARRANGEMENT OF SERVICE EQUIPMENT

2.3.1 The service equipment (stop valves, safety devices, manholes, instruments etc.) shall be so arranged as to prevent it from being broken away or damaged while in use, as well as take into consideration the serviceability and maintainability. Leakproofness of the service equipment shall be maintained even if the tank container is tipped over.

2.3.2 Safety devices of tanks for dangerous goods.

2.3.2.1 Each tank or tank compartment shall be provided with at least one spring type pressure-relief valve and may be additionally fitted with a frangible disk or a fusible element arranged in parallel to the spring pressure-relief valve, with the exception of cases specified in 2.3.2.6 and for tanks intended for the transportation of non-refrigerated liquefied gases. The safety devices shall be arranged in the vapour space in the top of the tank as near as possible to the tank's mid-length.

Each tank intended for transportation of non-refrigerated liquefied gases shall have at least two independent spring-type safety valves.

Tank intended for transportation of refrigerated non-combustible liquefied gases and hydrogen may be additionally fitted with frangible disks together with spring-type valves.

2.3.2.2 The pressure at which the spring pressure relief valve begins opening shall be at least 100 % and at most 125 % of the maximum allowable working pressure and shall be subject to special consideration by the Register in each case. Upon release of pressure the spring pressure-relief valve shall close at a pressure of at least 10 % below the pressure at which the valve begins opening and shall remain closed under all lower pressures.

2.3.2.3 Frangible disks arranged parallel to the spring pressure-relief valves shall rupture at a pressure equal to the hydraulic test pressure.

2.3.2.4 Fusible elements shall melt within the temperature range from 110 to 149 °C provided that the pressure which is built up in the tank at the melting temperature of the fusible element shall not exceed the test pressure. A fusible element shall have no thermal insulation or screen.

2.3.2.5 The total discharge capacity of the safety devices of a tank for liquid shall be such that under no conditions the pressure in tank exceeds the pressure at which the safety device comes into action by more than 20 %. The total discharge capacity of the spring pressure-relief valves of a tank for gases shall be such that under no conditions the pressure in tank exceeds the maximum allowable working pressure by more than 20 %.

The calculation of the discharge capacity and discharge area will be specially considered by the Register in each particular case.

2.3.2.6 Tanks intended for the transportation of specific dangerous goods shall be provided with safety devices including frangible disk located ahead of the spring type pressure-relief valve.

A pressure gauge or another indicator of the disk integrity shall be arranged between the frangible disk and the valve. The frangible disk in this case shall rupture at a pressure by 10 % greater than the pressure at which the pressure-relief valve begins opening, at the same time burst pressure tolerance shall not exceed ± 0,15 bar for marked burst pressure up to and including 3 bar and ± 5% for marked burst pressure above 3 bar.

2.3.2.7 Stop valves shall not be installed between the safety device and the tank.

2.3.2.8 Safety devices shall be so constructed as to prevent any change of their setting without the knowledge of authorized persons.

2.3.3 Pressure-relief valves of tanks intended for non-dangerous goods.

2.3.3.1 The tank containers intended for the transportation of non-dangerous goods may be provided with a safety device consisting of one frangible disk.

2.3.3.2 The pressure-relief valves shall be so designed as to begin opening at maximum allowable working pressure and to be fully open at a pressure exceeding the pressure at which the valves begin opening, by not more than 10 %.

2.3.3.3 The pressure-relief valves shall have a clear area of discharge, when fully open, sufficient to provide the minimum pressure relief capacity according to Table 2.3.3.3.

Table 2.3.3.3

Minimum pressure-relief capacity	Designation of tank-container				
	1AA	1A, 1AX	1BB, 1B, 1BX	1CC, 1C, 1CX	1D, 1DX
dm³/s	106	95	80	63	47
m³/min	6,4	5,7	4,8	3,8	2,8

2.3.4 Vacuum safety valves.

2.3.4.1 Vacuum valves shall be constructed in a way as to permit being set to internal pressure considering the kind of cargo carried, but in any case not below 0,021 MPa. If flammable Class 3 substances of are carried, the vacuum valves shall be fitted with flame trap.

2.3.5 Closing fittings and additional service equipment.

2.3.5.1 All the tank openings for the tank loading and discharge (cargo and air lines) shall be fitted with manually operated stop valves located as close to the tank as possible. The stop valves with screwed spindles shall be manually operated and closed by the clockwise motion of a handwheel. The "Open/ Closed" position and the closing direction for other valves shall be clearly indicated. Other openings, except those for safety devices, ventilation arrangements, thermometers, instruments and inspection holes, shall be provided with stop valves or other tight closure.

N o t e . Outlet flanges of stop valves shall be fitted with liquid-tight removable blinds (bolted flange or screw cap).

2.3.5.2 The tank containers with bottom discharge for the dangerous goods specified in valid normative documents, shall be equipped, as a minimum, with two shut-off devices arranged independently of one another and in series, namely:

.1 an external stop valve fitted as close to the tank as reasonably practicable;

.2 shut-off device impermeable for liquid on the end of drainage pipe, which may be a bolted blank flange or screwed cover.

2.3.5.3 The tank containers with bottom discharge for the solid, crystallizing or high viscosity dangerous goods specified in valid normative documents shall be equipped with three shut-off devices arranged independently of one another and in series, namely:

.1 a self-closing internal stop valve within the tank or within a flange welded to the tank or within a union being a part of the tank. The valve shall remain closed (operable) when subjected to impact or other inadvertent act. The valve may be operable both from above and below; the "Open/Closed" position shall be controlled, whenever possible, from below. Moreover, it shall be possible to close the valve from an accessible position of the tank container that is remote from the valve itself;

.2 an external stop valve;

.3 a shut-off device in accordance with 2.3.5.2.2.

2.3.5.4 The discharge (filling) openings for specific dangerous goods shall be located above the load level. Design, number and mutual arrangement of these shut-off devices shall comply with the national and international requirements applied to tank containers intended for transportation of dangerous goods.

2.3.5.5 Tank containers may be fitted with cargo level indicators. Tank containers for the carriage of liquefied gases shall be fitted with cargo level indicators. The construction of cargo level indicators shall comply with the applicable requirements of Part VIII "Instrumentation" of the Rules for the Classification and Construction of Ships Carrying Liquefied Gases in Bulk.

2.3.5.6 To permit inspection, repair and other works, the tanks shall have manholes not less than 500 mm in diameter. The covers of manholes shall be secured in an effective manner. The tightness shall be ensured by gaskets resistant to effects of the cargo carried and climatic conditions.

No inspection opening is needed in the vacuum insulated tanks.

N o t e . In justified cases, for special containers different in structure from those complying with ISO 1496-3, the installation of hatches of at least 450 mm is permitted.

2.3.5.7 The internal burst pressure of all piping and fittings shall be not less than the maximum of two following values: four times the maximum allowable working pressure of the tank or four times the pressure, to which it may be subjected during operation with working pump or other devices (except pressure-relief valves). Piping shall not be damaged due to vibration, impacts, cargo and environment temperature influence.

Pipe joints, which may be shut-off from two sides and which may contain liquid, shall be fitted with safety devices in order to avoid increased pressure in the closed pipe section.

2.3.5.8 All valves and fittings shall be located as near the tank as practicable and shall have additional external protection from mechanical damage and shall be grouped in a minimum number of positions on the tank.

2.3.5.9 The tanks and framework shall be adequately earthed.

2.3.5.10 When a tank container or each compartment of a tank container is equipped with the pressure gauges connected with the vapour space of the tank or compartments, the pressure gauges shall be of vibration-proof version and comply with the tank container design on the climatic version and test pressure. A stop valve shall be fitted between the pressure gauge and tank.

2.3.5.11 The tank container jackets with vacuum insulation shall be fitted with a branch pipe for vacuum-gauge.

2.3.6 Materials.

2.3.6.1 The materials used for manufacture of parts and fittings units, as well as service equipment, which contact or may contact the cargo, shall be chemical-resistant to its effect within the temperature range specified in the technical documentation for the container.

2.3.6.2 The materials used for sealing fittings hatches and service equipment shall be chemical resistant to the cargoes carried, elastic (where needed), durable and resistant to mechanical wear within the temperature range specified in the technical documentation for the container.

2.4 THERMAL INSULATION

2.4.1 Material of thermal insulation shall be, where possible, non-hygroscopic and physically and chemically resistant.

2.4.2 Thermal insulation shall not obstruct the service equipment.

2.4.3 Thermal insulation shall be protected to prevent the ingress of moisture and damage under normal operational conditions.

2.4.4 Thermal insulation directly in contact with the tank intended for substances transported at elevated temperature shall have the ignition temperature of at least 50 °C higher than the maximum design temperature of the tank.

2.4.5 Thermal insulation systems intended for reduction of the minimal emergency capacity of pressure-relief devices are subject to the special consideration by the Register and they shall, at least:

remain effective at all temperatures below 649 °C;

be jacketed with the material having a melting point of 700 °C or greater.

2.4.6 Thermal insulation of tank containers intended for transportation of non-refrigerated liquefied gases shall comply, among others, with the following requirements:

.1 in case a sun screen is used, it shall cover not less than the third but not more than the upper half of the tank surface and shall be separated from the tank surface by 40 mm across the whole area;

.2 in case a complete cladding of insulating materials is applied, it shall provide heat transfer coefficient of not more than 0,67 W/(m²K);

.3 in case the thermal insulation is gas-tight, a device shall be provided to prevent any dangerous pressure from developing in the insulating layer in the event of inadequate gas-tightness of the tank or its items of equipment.

2.4.7 The insulation systems of tank containers intended for transportation of refrigerated liquefied gases shall comply with the applicable national and international requirements and are subject to special consideration by the Register in each case.

2.5 ADDITIONAL UNITS

2.5.1 The refrigerating and/or heating plants, if provided for tank containers, shall conform to the requirements of Part III "Thermal Containers".

2.6 WELDING

2.6.1 Welding shall be carried out in accordance with the requirements of 3.7, Part I "Basic Requirements" taking into account the requirements of this Chapter.

2.6.2 When welding the shell made of aluminium and its alloys it is possible to apply friction stir welding (FSW) complying with the requirements of 2.10.10, Part XIV "Welding" of the Rules for the Classification and Construction of Sea-Going Ships.

2.6.3 Scope and assessment of quality of friction stir welded joints shall comply with the requirements of 3.3.10 and 3.5.5, Part XIV "Welding" of the Rules for the Classification and Construction of Sea-Going Ships.

3 TESTING

3.1 GENERAL

3.1.1 The requirements of this Section apply to tank containers of all dimensions, irrespective of their construction and material involved.

3.1.2 To achieve the specified test loadings, the tank shall be loaded with a suitable liquid. If the test loading cannot be met or the liquid is undesirable for use, the tank shall be loaded with another liquid with application of a supplementary loading so that the specified value of test loading is reached. The nonuniformity in distribution of test loading shall not exceed 20 %.

3.1.3 On completion of each test, the tank container shall show neither permanent deformation nor abnormalities which may render it unsuitable for the designed purpose.

3.1.4 Test loadings and testing procedures for lifting, stacking (except requirements for total mass of container), racking, and longitudinal restraint are specified in Section 3, Part II "General Freight Containers". When carrying out the stacking test, the internal test load mass shall be achieved only by filling the tank completely with water and the external forces applied to each of four top corner fittings of the container shall be as follows:

942 kN: for 1AAA, 1AA, 1A, 1AX, 1BBB, 1BB, 1B, 1BX, 1CC, 1C and 1CX containers;

224 kN: for 1D and 1DX containers.

3.2 WALKWAYS STRENGTH

3.2.1 The tank container has no internal loading. The test is carried out by the application of external force represented by a concentrated load of 3 kN and uniformly distributed in the area of 600×300 mm. This load shall be applied vertically downwards to the outer surface of each walkway in its weakest part.

3.3 LADDER STRENGTH

3.3.1 The tank container has no internal loading. The test is carried out by the application of external force represented by a concentrated load of 2 kN. This load shall be applied vertically downwards to the middle of each step.

3.4 LATERAL INERTIA TEST

3.4.1 The tank container having a uniformly distributed internal loading so that the combined mass of the container and test load is equal to R, shall be positioned with its transverse axis vertical.

N o t e . The internal loading may be applied to the tank container after it is in lateral position. This test is not required for containers without longitudinal frames.

One pair of the bottom comer fittings at the lower side shall be restrained in this position against lateral and vertical shifting. The other pair of fittings at the upper side shall be restrained against lateral shifting only.

Depending on construction of the tank container, subject to agreement with the Register, other container positioning scheme may be used.

For testing of the opposite side, the tank container shall be turned to 180° about its vertical axis so that the pair of bottom corner fittings that were at the upper side, are at the lower side.

Restraint of the tank container is provided in similar manner.

The tank container is held in this position, for each side, for at least 5 min (refer to Fig. 3.4.1).

During the test and after unloading the damages, elastic and permanent deformations of the tank, its fittings and framework shall be identified.

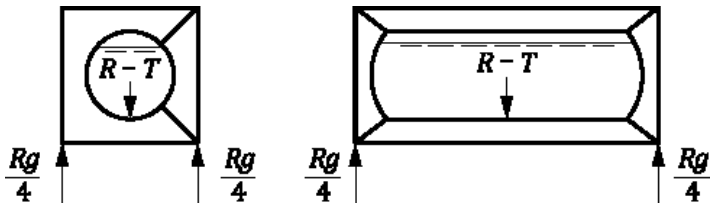

Fig. 3.4.1
Lateral inertia test

3.5 LOAD-TRANSFER AREA TEST

3.5.1 A tank container filled with water to a mass $2R-T$ shall be placed on four supports in such a way that two supports are against the external contact areas and two – against the internal ones (refer to 3.5.1). Each of the supports shall have a bearing surface of 150×150 mm. The container shall be under load during 5 min. An identical test shall be carried out for the second pair of contact areas. In case where the load-transfer areas of a tank container are arranged symmetrically only one pair of contact areas shall be subjected to the test. During the test and after unloading the damages, elastic and permanent deformations of the tank, its fittings and framework shall be identified.

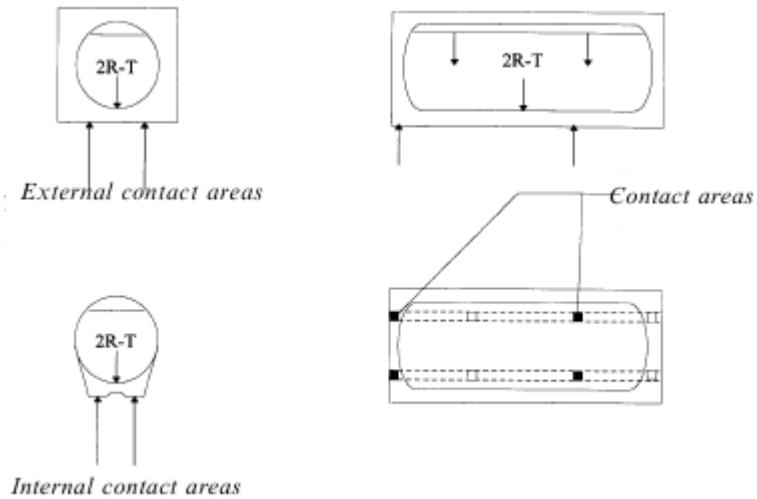

Fig. 3.5.1
Load-transfer area test

3.6 DYNAMIC LONGITUDINAL IMPACT TEST

3.6.1 A tank container filled to its gross mass R shall be tested for a dynamic longitudinal impact with an overload of at least $4g$ for dangerous goods and $2g$ for non-

dangerous goods within the time period representative for the impulses typical for the railway transport.

The procedure for impact tests shall comply with the requirements of Section 41, Part IV of the UN Manual of Tests and Criteria.

After the test, the damages and deformations of the tank, its fittings and frame shall be identified.

3.7 PRESSURE AND LEAKPROOFNESS TESTS

3.7.1 The pressure test shall be carried out after the completion of the test described in 3.1 – 3.6.

3.7.2 Each tank container shall be subjected to pressure test before shot-blasting or other tank surface treatment, installation of thermal insulation and protective covering (if provided).

3.7.3 Pressure and vacuum relief valves shall be removed prior to beginning the pressure test.

3.7.4 Tank containers intended for transportation of non-dangerous goods with maximum allowable working pressure not more than 0,07 MPa shall be subjected to pressure test by not less than 1,5 maximum allowable working pressure but not less than 0,045 MPa.

Tank containers intended for transportation of Class 3 – 9 dangerous goods shall be subjected to pressure test, which shall be not less than 1,5 design pressure.

Tank containers intended for transportation of non-liquefied gases shall be subjected to pressure test, which shall be not less than 1,3 design pressure.

Tank containers intended for transportation of refrigerated liquefied gases shall be subjected to pressure test, which shall be not less than 1,3 maximum allowable working pressure. For tank containers with vacuum insulation, pressure at hydraulic tests shall exceed not less than 1,3 times the sum of the maximum allowable working pressure and 0,1 MPa. The test pressure shall be maintained for the period of time necessary to enable a complete inspection of the tank and its fittings to be made but not less than 30 min. The tank testing procedure different from that set forth in this paragraph shall be subject to a special consideration by the Register.

3.7.5 Where the tank is provided with compartments, each compartment shall be tested. In this case compartments adjacent thereto shall be empty and the pressure in the compartments shall correspond to the atmospheric.

3.7.6 The test pressure shall be measured at the top of the tank or compartment; with the tank in its normal operational position.

3.7.7 The main membrane stresses arising in shell and heads of the tank under pressure test shall not exceed $0{,}75R_e\left(0{,}75R_{p0,2};\ R_{p1}\right)$ or $0{,}5\ R_m$, whichever is lesser.

N o t e . $0{,}75R_e\left(0{,}75R_{p0,2};\ R_{p1}\right)$ and $0{,}5\ R_m$ – refer to 2.2.

For metals characterized only by the minimum assured tensile strength, stresses shall not exceed $0{,}375\ R_m$.

3.7.8 If the results of pressure test are satisfactory, the tank assembled with operational and safety fittings with standard service equipment shall be subjected to leakproofness test.

The test is performed using pressurized air. The test pressure shall be taken with regard to the valid safety requirements relevant to the test location and shall be 0,25 to 0,9 times the maximum allowable working pressure, subject to special consideration by the Register in each particular case.

For tank-containers intended for transportation of non-refrigerated liquefied gases, the test pressure should be taken at least 0,9 times the maximum allowable working pressure.

A tank container shall be under pressure during a period of time necessary to enable a complete inspection of the tank and its fittings but not less than 5 min. Other tank leakproofness test procedures may be used, subject to the Register approval.

3.7.9 The refrigerating and/or heating systems, if provided for the tank container, shall be tested by pressure equal to 1,5 times the working pressure of the system. Duration of the test shall be such as is necessary for the system to be thoroughly inspected.

3.7.10 Other test procedures may be used if approved by the Register.

3.8 THERMOTECHNICAL TESTS OF TANK CONTAINERS INTENDED FOR THE TRANSPORTATION OF REFRIGERATED LIQUEFIED GASES

3.8.1 Thermotechnical tests shall be carried out after the tests specified in 3.1 – 3.7.

3.8.2 Thermotechnical tests shall consist of two stages:

.1 check of effectiveness of insulation system (heat influx in W);

.2 check of reference holding time for each refrigerated liquefied gas intended for the transportation in tank container.

3.8.3 Check of insulation system effectiveness may be carried out by two procedures:

.1 constant pressure test (for instance, at atmospheric pressure) when loss of refrigerated liquefied gas is measured during the given period of time;

.2 closed system test when an increase of pressure in casing is measured during the given period of time.

When the tests are run at constant pressure, change of atmospheric pressure shall be considered. A correction for any change of ambient temperature shall be made during both tests assuming that ambient temperature is equal to 30 °C.

3.8.4 Reference holding time is checked for each refrigerated liquefied gas on the basis of the following data:

.1 effectiveness of the insulation system determined in accordance with 3.8.3;

.2 the lowest pressure, for which safety devices are adjusted;

.3 initial filling conditions (filling temperature and pressure);

.4 estimated ambient temperature is taken equal to 30 °C;

.5 physical properties of specific refrigerated liquefied gas intended for transport.

3.8.5 Test procedure shall be approved by the Register.

3.9 TESTING OF PRESSURE-RELIEF AND VACUUM VALVES

3.9.1 During testing of the pressure-relief valves the following parameters shall be determined:

.1 opening pressure of the valve;

.2 discharge capacity with the valve being fully open (at the prototype test);

.3 closing pressure of the valve.

3.9.2 The vacuum valves shall be tested for opening pressure.

3.10 INSPECTIONS

3.10.1 A tank container shall be subjected to inspections according to 3.17, Part II "General Freight Containers".

3.10.2 After completion of tests all service equipment shall be tested in operation.

4 MARKING

4.1 MANDATORY MARKING

4.1.1 Tank containers shall be marked in accordance with the requirements set forth in Section 4, Part I "Basic Requirements".

4.2 TARE MASS

4.2.1 A tare mass is marked on each tank container in accordance with the approved technical documentation.

At the request of the customer and (or) the owner and (or) operator, the tare mass marked on the tank container can be obtained by weighing each tank container in a painted and fully completed form, while the actual tare mass shall be within the tolerance for this value specified in the approved technical documentation.

4.3 IDENTIFICATION PLATE WITH TANK DATA

4.3.1 In addition to CSC and CCC Plates the tank identification plate shall be firmly attached to the tank container frame in compliance with the requirements of applicable national and international documents. The tank identification plate of tank containers for the transportation of dangerous cargoes shall be made in English and contain at least the following data:

1. Owner's registration number.
2. Manufacturing information:
2.1. Country of manufacture;
2.2. Year of manufacture;
2.3. Manufacturer's name or mark;
2.4. Manufacturer's serial number;
2.5. Letters of the design model.
3. Approval information:
3.1. The United Nations packaging symbol;
3.2. Portable tank instruction (determined in accordance with 4.2.5.2.6 of the UN Model Regulations);
3.3. Approval country;
3.4. Authorized body for the design approval – Russian Maritime Register of Shipping;
3.5. Design approval number;
3.6. Letters "AA", if the design was approved under alternative arrangements (see 6.7.1.2 of IMDG Code);
3.7. Pressure-vessel design code.
4. Pressures:
4.1. MAWP (in bar or MPa[1]);
4.2. Test pressure (in bar or MPa[1]);
4.3. Initial pressure test date (month and year) and Register stamp;
4.4. External design pressure, bar/MPa[1];
4.5. MAWP for heating/cooling system, bar/MPa[1].
5. Temperatures:

[1] Gauge pressure.

5.1. Design temperature range in °C.
6. Materials:
6.1. Shell material(s) and material standard reference(s);
6.2. Nominal thickness of the shell and heads, mm;
6.3. Equivalent thickness in reference steel, mm;
6.4. Lining material (when applicable).
7. Capacity:
7.1. Water capacity at 20 °C, 1. This indication shall be followed by symbol "S" when the tank is subdivided by baffle plates into compartments of not more than 7500 1 in capacity;
7.2. Water capacity of each compartment at 20 °C (if any), 1. This indication shall be followed by symbol "S" when the compartments is subdivided by baffle plates into sections of not more than 7500 1 in capacity.
8. Periodic inspections and tests:
8.1. Type of the most recent periodic test (2,5-year, 5-year or exceptional);
8.2. Date of the most recent periodic test (month and year);
8.3. Test pressure, bar/MPa[1] of the most recent periodic test (if applicable);
8.4. Identification mark of the authorized body that performed or witnessed the most recent test.
An example of a plate for portable UN T1 – UN T23 tanks is shown in Fig. 6.7.2.20.1 of the IMDG Code;
An example of a plate for portable UN T50 tanks (non-refrigerated liquefied gases) is shown in Fig. 6.7.3.16.1 of the IMDG Code;
An example of a plate for portable UN T75 tanks (refrigerated liquefied gases) is shown in Fig. 6.7.4.15.1 of the IMDG Code;
An example of a label for multiple-element gas containers (MEGC) is shown in Fig. 6.7.5.13.1 of the IMDG Code.

N o t e s : 1. In addition to the text in English it is allowed to give text in Russian or other language upon customer's request.
2. Design reference temperature, °C, shall be specified on the identification plate of tank containers intended for transportation of non-refrigerated liquefied gases; indication of protective covering and insulation is not required.
3. The following information shall be additionally specified on the identification plate of tank containers intended for transportation of refrigerated liquefied gases.
3.1 Minimum design temperature, °C.
3.2 Full name of the gases allowed for transportation.
3.3 Type of the insulation ("thermally insulated" or "vacuum insulated").
3.4 Effectiveness of the insulation system (heat influx) watts (W).
3.5 Reference holding time, days or hours.
3.6 Initial pressure, bar/MPa[1].
3.7 Degree of filling for every refrigerated liquefied gas approved for transportation.
4. If the tank container is approved for handling at sea, then the following inscription shall be written on the plate: "OFFSHORE PORTABLE TANK".

4.3.2 A blank space shall be provided on the plate for entering the dates of subsequent hydraulic tests, as well as for putting the Register brand.
4.3.3 The data marked on the plate shall be embossed on, or indicated on its surface in any other conspicuous way.
4.3.4 The plates shall be manufactured of corrosion-resistant and incombustible material. The letters shall be not less than 3 mm in height.

[1] Gauge pressure.

4.3.5 The identification plate shall be fixed as near as possible to the CSC and CCC Plates (refer to 4.1, Part I "Basic Requirements").

4.4 SERVICE EQUIPMENT

4.4.1 All the valves shall have inscriptions showing their intended purpose.

4.4.2 **Marking of pressure relief devices.**

4.4.2.1 Each pressure relief device shall be clearly and permanently marked with the following:

.1 the pressure at which the valve is set to discharge (MPa or bar) or an operational temperature range (°C);

.2 the allowable tolerance at the discharge pressure for spring-loaded devices or the actuation pressure for frangible disks;

.3 reference temperature corresponding to the rated actuation pressure for frangible disks;

.4 temperature tolerance for fusible elements;

.5 the rated flow capacity of spring-loaded pressure relief devices, frangible discs or fusible elements under normal conditions (external pressure is 1 bar and ambient temperature is 0 °C) in standard (normal) cubic meters of air per second, nm^3/s;

.6 cross-sectional area of spring-loaded pressure relief devices, frangible discs and fusible elements, mm^2;

.7 name of manufacturer, serial number and relevant catalogue number (model);

.8 valve body material brand.

4.4.3 Each branch pipe of tank container shall have clear marking of its purpose.

4.4.4 Stop devices shall be marked as follows:

.1 name or manufacturer's trademark;

.2 designation of the stop device model or number by catalogue;

.3 nominal diameter, mm;

.4 conditional pressure, MPa (it is permitted to indicate the maximum allowable working pressure and the permissible temperature);

.5 direction of medium flow;

.6 brand of body material.

PART V. PLATFORM CONTAINERS AND PLATFORM-BASED CONTAINERS

1 GENERAL

1.1 APPLICATION

1.1.1 The provisions of this Part apply to 1AAA, 1AA, 1A, 1AX, 1BBB, 1BB, 1B, 1BX, 1CC, 1C, 1CX platform containers and platform-based containers.

1.1.2 Platform containers and platform-based containers shall comply with the applicable requirements of Part I "Basic Requirements" and with the requirements of this Part.

1.1.3 The platform containers and platform-based containers differing in design, dimensions and mass from those defined in this Part are subject to special consideration by the Register in each particular case.

1.2 DEFINITIONS AND EXPLANATIONS

1.2.1 The definitions and explanations relating to the general terminology of these Rules are given in 1.1 of the General Regulations for the Technical Supervision of Containers For the purpose of this Part the following definitions and explanations have been adopted.

Platform (platform container) means a container having no superstructure but having only a base with floor with the same length and width as the base of series 1 containers, and equipped with top and bottom corner fittings, located as on other series 1 containers.

Platform-based container means a container which has no side walls but has a base similar to that of a platform container.

Platform-based container may be:

platform-based container with incomplete superstructure and fixed ends is a container having a base with floor and non-folding ends equipped with top corner fittings; top longitudinal members are not provided;

platform-based container with incomplete superstructure and folding ends is a container having a base with floor and folding ends equipped with top corner fittings; top longitudinal members are not provided;

platform-based container with complete superstructure is a container having a base with floor, top side end rails equipped with top corner fittings, roof or open top.

Folding ends of a platform-based container mean the structures which may be laid on (folded down) the floor for the purpose of transportation or stowage of empty containers.

Incomplete superstructure is a superstructure lacking any permanently fixed longitudinal load-carrying structure between the ends other than at the base.

Module of containers is a certain number of identical platform-containers or platform-based containers with a folding end structure, folded into a single pile (module).

Interlocking devices of platform container with folding ends are devices securing the end structure in vertical position, as well as those interconnecting empty containers to form an interlocked pile (module).

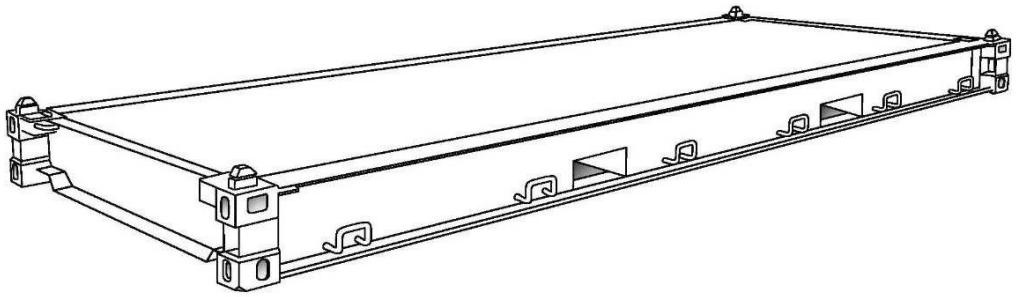

Fig. 1.2.1-1
Platform container

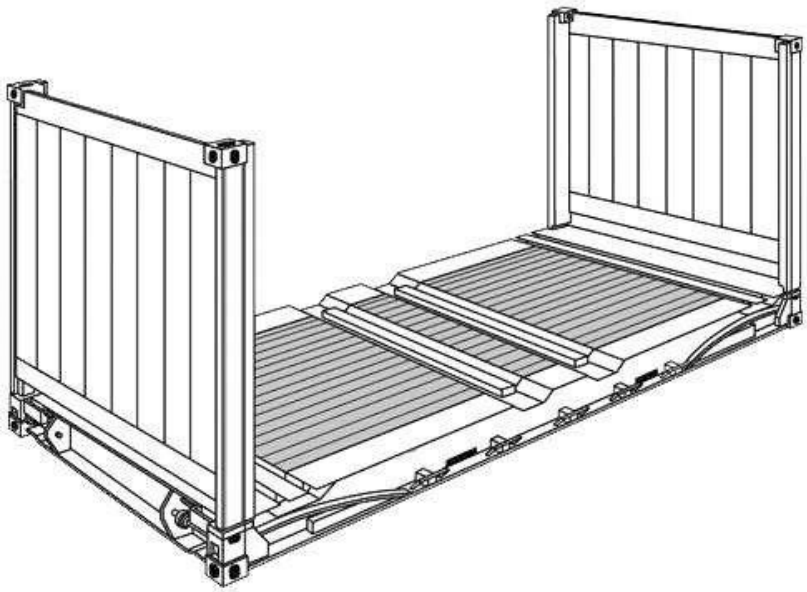

Fig. 1.2.1-2
Platform-based container

1.3 SCOPE OF TECHNICAL SUPERVISION

1.3.1 Technical supervision of the Register shall cover:
.1 base structure with floor;
.2 corner fittings;
.3 end structure of platform containers;
.4 locking devices of end structure;
.5 framework.

1.4 TECHNICAL DOCUMENTATION

1.4.1 The scope of the technical documentation, submitted for consideration, as well as the forms for confirming the compliance of the technical documentation with the RS requirements, are specified in Table 1.4.1 and may be changed upon the agreement with RS.

Table 1.4.1

№		Наименование документа	Set[1]	Review result[2]
1	Technical conditions or technical specification		I	A
2	Prototype static test program, if testing will be carried out at the manufacture		II	A
3	Assembly drawing of:			
	.1	container[3]	I	A
	.2	rear end wall	I	A
	.3	front end wall	I	A
	.4	side wall	I	A
	.5	base	I	A
	.6	cap	I	A
	.7	plates (CSC and CCC)	I	A
	.8	marking	I	A
	.9	cover (type of seams and corners) with a cable and its tips for imposing customs stamps and seals	I	A
4	Drawings indicating dimensions and used materials of (if this information is not on the assembly drawings):			
	.1	corner and intermediate posts	II	A
	.2	upper longitudinal, end and intermediate beams	II	A
	.3	lower longitudinal, end and intermediate beams	II	A
	.4	element to which the CCC requirements apply	II	A
	.5	floors (fastening, sealing, dimensions of plywood, boards and configuration of their edges)	II	A
	.6	fixing devices for connecting empty identical platform containers or platforms-based containers with folding end structure into a stack (package)	II	A
	.7	turning units and fixing devices of the end walls, if the ends are folding	II	A
	.8	cargo securing devices	II	A

[1] In case of submission of technical documentation in parts, documents marked with the number (I) should be submitted with the first part. Documents marked with the number (II) may be submitted with the second and subsequent parts. The volume of technical documentation provided with the first part may be changed upon the agreement with RS.
[2] A — approved; Ag — agreed; FI — for information. If necessary, the documents may be approved and/or agreed subject to the implementation of the comments of the RS letter.
[3] RS may additionally request documents on the floor materials and antiseptic impregnation, coatings and sealing materials used.

Notes: 1. Documents specified in this Table may not be provided upon the agreement with RS, if all necessary information is contained in other documents, included in the set of technical documentation.
2. Documents containing information about structural elements that are not applicable to a specific container are not submitted to RS.

2 TECHNICAL REQUIREMENTS

2.1 DIMENSIONS AND MASS

2.1.1 The dimensions of the base (width W and length L) for platform containers and platform-based containers shall comply with those shown in Table 2.1.2, Part I "Basic Requirements".

2.1.2 The length of platform-based containers with incomplete superstructure, taken between the top corner fittings shall comply with the figures shown in Table 2.1.2.

Table 2.1.2

Designation	Overall top dimension in tare condition T L_{max}, mm	Overall top dimension when loaded to R L_{min}, mm
1AAA, 1AA, 1A, 1AX	12202	12172
1BBB, 1BB, 1B, 1BX	9135	9105
1CC, 1C, 1CX	6068	6042

Notes: 1. Any movement of the corner posts resulting from the change from the empty to the fully loaded condition of the container shall, as far as practicable, be equally disposed about the mean of the values of L_{max} and L_{min}.
2. Taking into account the fact that the mechanism of the folding end structures may introduce natural play, the values of L_{max} and L_{min}
specified in this Table shall be met. Failure to comply with this requirement is liable to lead to handling difficulties.

2.1.3 No part of the platform container or platform-based container shall project beyond the external dimensions specified in:

Table 2.1.2, Part I "Basic Requirements" and ISO 668 standard for the external dimensions of the base structure, the external dimensions of the top part of platform-based container with complete superstructure and the overall maximum height which may also be of reduced dimensions; or

Table 2.1.2 for the external dimensions of platform-based containers with incomplete superstructure.

2.1.4 A module of containers made of platform containers or platform-based containers with folded ends in folded position shall comply with the dimensions specified in Table 2.1.2, Part I "Basic Requirements" and those established in ISO 668, and its height shall not exceed 2591 mm.

2.1.5 External dimensions are not specified in this Part except for minimum external dimensions of 1CC, 1C и 1CX platform-based containers given in Table 2.1.5.

Table 2.1.5

	1CC	1C	1CX
H_1	2591 mm	2438 mm	< 2438 mm
H_2	2200 mm	2000 mm	H_1– 390 mm
H_3	2000 mm	1800 mm	H_1– 590 mm

2.1.6 Maximum gross mass R of containers shall comply with those given in Table 2.1.2, Part I "Basic Requirements" and established in ISO 668.

2.1.7 Maximum mass of module of containers (considering interlocking devices for containers) shall not exceed maximum gross mass given in Table 2.1.2, Part I "Basic Requirements" and established in ISO 668 for dimensions of this module.

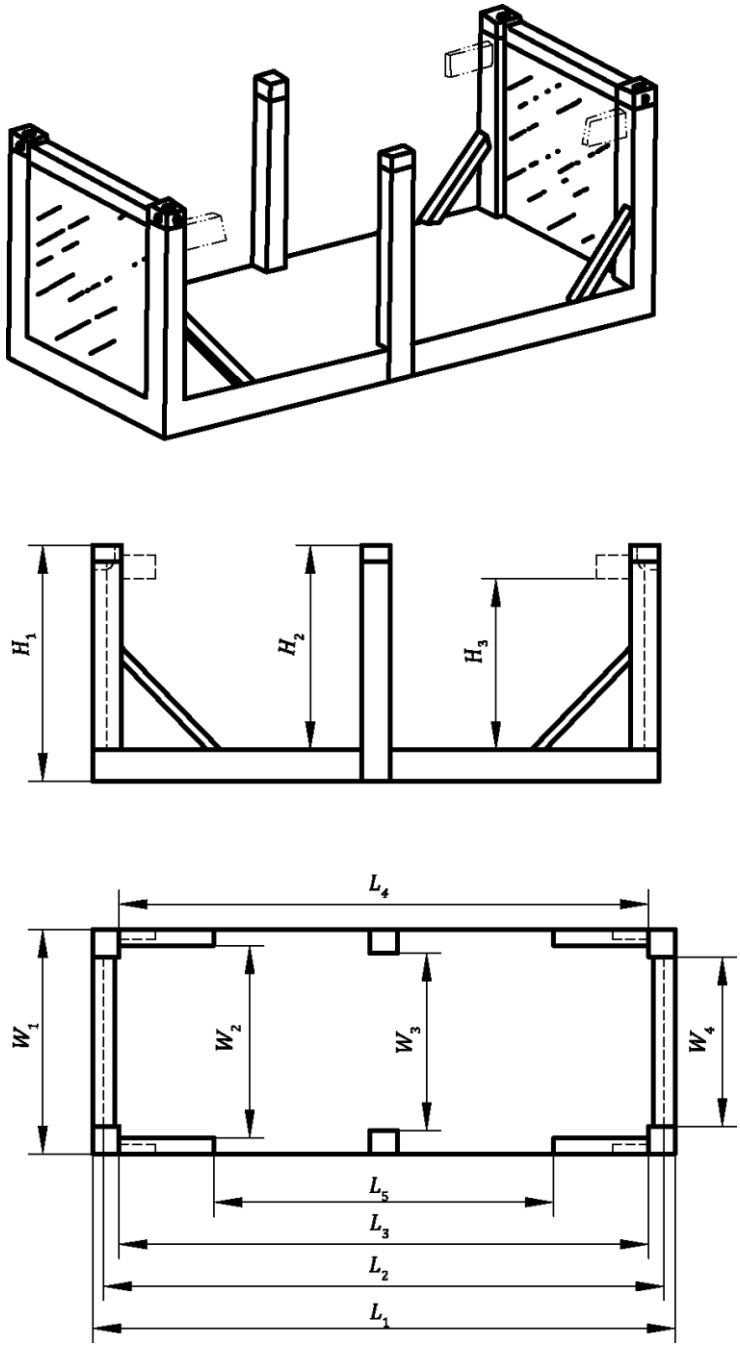

Fig. 2.1.5:

L_1 – overall external length (6058 mm); L_2 – internal length between walls (5800 mm); L_3 – internal length between top transverse member (5600 mm); L_4 – internal length between corner posts (5600 mm); L_5 – internal length between the diagonals of the lateral stiffeners (if any) (5200 mm); W_1 – overall external width (2438 mm); W_2 – internal width between the diagonals of the stiffeners (if any) (2100 mm); W_3 – internal width between intermediate posts (if any) (2100 mm); W_4 – internal width between corner posts (1700 mm); H_1 – overall external height; H_2 – internal height; H_3 – internal height under bearer (if any) of intermediate side longitudinal rail

2.2 CORNER FITTINGS

2.2.1 All containers shall be equipped with top and bottom corner fittings. The requirements and positioning of the corner fittings are given in ISO 1161, except for the case described in 2.1.2.

N o t e . 1. For 1CX platform containers, the top and bottom corner fittings can be combined providing they comply with ISO 1161.

2. Due to greater inherent flexibility of all sizes of platform-based containers with incomplete superstructure, the top aperture of top corner fittings can be increased by 10 mm in the direction of their end wall. In such a case, the end aperture shall be omitted in order to retain corner fitting strength.

2.2.2 Platform-based containers with folding ends shall be equipped with features such that, in the folded condition, they may be stacked and secured, lifted from the top by means of a spreader equipped with corner fitting locking devices and interlocked with other platform-based containers having similar folding end structures.

The features shall have at least an equivalent to the upper face and internal cavity of the top corner fitting.

The positioning of these features on the platform-based container with ends in the folded condition shall meet the requirements of ISO 1161.

2.2.3 For all containers, including platform-based containers with folding ends folded down, the upper faces of the top corner fittings or equivalent features specified in 2.2.2 shall protrude above the top of the container by a minimum of 6 mm. "Top of the container" is understood as the highest level of any part of the container, for example the level of the top of a soft cover.

However, if reinforced zones or doubler plates are provided to afford protection in the vicinity of the top corner fittings, such plates and their securements shall not protrude above the upper faces of the top corner fittings.

These plates shall not extend more than 750 mm from either end of the container but may cover the full width.

2.3 BASE STRUCTURE

2.3.1 The base structure shall meet the requirements of 2.3, Part I "Basic Requirements" and ISO 668.

2.3.2 The base structure shall be designed to withstand all forces, particularly lateral forces, induced by the cargo in service (refer to 2.6.3, 2.6.4 and Figs. 2.3.2-1 and 2.3.2-2). This is particularly important where provisions are made for securement of cargo to the base structure of the container.

2.3.3 Camber may be provided with respect to the end transverse members.

When a container with camber is loaded to its gross mass R, its base on the transport facility shall be approximately horizontal.

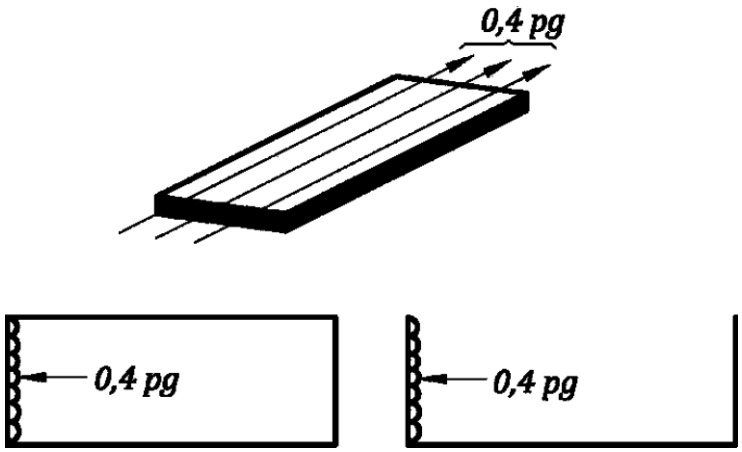

Fig. 2.3.2-1

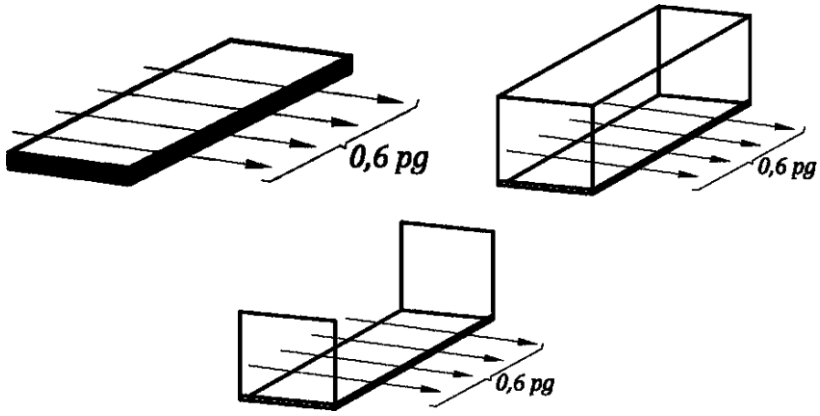

Fig. 2.3.2-2

2.4 END STRUCTURE (PLATFORM-BASED CONTAINERS ONLY)

2.4.1 The ends of platform-based containers with fixed or folding ends may be interconnected by top rails or be constructed with no top rails as freestanding posts. The ends designed with a top rail between them may be constructed as end walls.

2.4.2 For all platform-based containers, the sideway deflection of the top of the container with respect to the bottom of the container, at the time it is under full transverse rigidity test conditions, shall not cause the sum of the changes in length of the two diagonals to exceed 60 mm.

2.4.3 Any extending parts of the platform-based containers which in service may cause a dangerous situation to occur shall be equipped with fixing devices with external indication of the fixed position.

2.5 SIDE STRUCTURE (PLATFORM-BASED CONTAINERS ONLY)

2.5.1 For all platform-based containers, the longitudinal deflection of the top of the container with respect to the bottom of the container, at the time it is under full longitudinal rigidity test conditions, shall not exceed 42 mm.

2.6 WALLS

2.6.1 Where containers are provided with end walls, these shall be able to withstand the effects of strength test in 3.6, except for the case implied in 2.6.3.

2.6.2 Where openings are provided in end walls, the ability of these walls to withstand strength test in 3.6 shall not be impaired.

2.6.3 Where containers are provided with ends which are not able to withstand test in 3.6, means shall be provided for securing the cargo to the base structure in such a manner that the cargo does not transmit longitudinal forces to the end walls.

2.6.4 Since the containers do not have side walls, adequate means shall be provided to permit the securing of the cargo against lateral movement.

2.7 CARGO-SECURING SYSTEM

2.7.1 Cargo-securing system shall comply with the requirements specified in 2.6.4, Part I "Basic Requirements" and ISO 1496-5.

2.7.2 The anchor points shall be designed and installed along the perimeter of the container base structure in such a way as to provide securing capability at least equivalent to:

load $0{,}6P$, transversally;

load $0{,}4P$, longitudinally (for those containers having no end walls or end walls not capable of withstanding test, refer to 3.6).

Such securing capability can be reached either:

by a combination of a minimum number of anchor points rated to an appropriate load; or

a combination of a higher number of anchor points having a lower individual rate load.

2.7.3 Anchor points and lashing points shall be designed and fitted in such a way that:

the ropes or other means of lashing the cargo shall not protrude beyond the overall dimensions given in 2.1;

no part of the securing devices shall protrude above the plane located 6 mm below the upper face of the top corner fittings or their equivalent features specified in 2.2.2;

as far as practicable, they shall not infringe the cargo-loading area and shall therefore be located less than 0,25 m from the edge of the platform.

2.7.4 Each anchor point shall be designed and installed (regardless of their actual number) to provide a minimum rated load of 3000 kg in any direction.

2.7.5 Each lashing point shall be designed and installed to provide a minimum rated load of 1000 kg in any direction.

2.8 OPTIONAL STRUCTURES

2.8.1 Fork-lift pockets for handling containers in the loaded or unloaded condition may be provided as optional features.

2.8.2 Fork-lift pockets may be provided on 1AAA, 1AA, 1A, 1AX, 1BBB, 1BB, 1B, 1BX containers for empty handling only. Appropriate marking shall be applied near the pockets.

2.8.3 The fork-lift pockets, where provided, shall meet the dimensional requirements specified in 2.6.1, Part I "Basic Requirements" and ISO 1496-5.

3 TESTING

3.1 GENERAL

3.1.1 The requirements of this Section apply to containers specified in 1.1.

3.1.2 Containers shall be tested in the condition for which they are designed to be operated.

A platform-based container with incomplete superstructure and folding ends shall have the ends in erected (service) condition during the test.

Platform-based containers equipped with removable structural items shall be tested with these items in position.

3.1.3 Although the tests are numbered in a certain order, they may be carried out in a different order if more appropriate to optimize utilization of the testing facilities or interpretation of the test results. However, the weatherproofness test, where appropriate, shall always be performed after all structural tests have been completed.

3.1.4 The test load or loading inside the container shall be uniformly distributed.

3.1.5 The test loads and loadings specified in all of the following tests are minimum requirements.

3.1.6 Upon completion of each test, the platform containers shall show neither permanent deformations nor abnormalities which may render them unsuitable for the designed purpose. The dimensional requirements specifying its serviceability for reloading, securing and transportation shall be met.

3.2 STACKING

3.2.1 This test shall be carried out to prove the ability of a fully loaded container to support a superimposed mass of containers.

3.2.2 The test load and the procedure of testing are specified in 3.7, Part II "General Freight Containers" and 6.2 of ISO 1496-5.

3.2.3 Empty platform container shall be subjected to vertical forces applied either to all four corner fittings simultaneously or to each pair.

3.2.4 The platform-based container loaded up to $1{,}8R$ shall be subjected to vertical forces applied either to all four corner fittings simultaneously or to each pair.

3.3 LIFTING FROM THE TOP CORNER FITTINGS

3.3.1 This test shall be carried out to prove the ability of a container to withstand being lifted from the four top corner fittings with the lifting forces applied vertically. These are the only recognized ways of lifting these platform containers by the four top corner fittings.

This test shall also be regarded as proving the ability of the floor and base structure to withstand the forces arising from acceleration of the payload in lifting operations.

3.3.2 The test load and the procedure of testing are specified in 3.2, Part II "General Freight Containers" and 6.3 of ISO 1496-5.

3.4 LIFTING FROM THE BOTTOM CORNER FITTINGS

3.4.1 This test shall be carried out to prove the ability of a container to withstand being lifted from its four bottom corner fittings by means of lifting devices bearing on the bottom corner fittings only and attached to a single transverse central spreader beam above the container.

3.4.2 The test load and the procedure of testing are specified in 3.3, Part II "General Freight Containers" and 6.4 of ISO 1496-5.

3.5 LONGITUDINAL RESTRAINT (STATIC TEST)

3.5.1 This test shall be carried out to prove the ability of a container to withstand longitudinal external restraint under dynamic conditions of railway operations, which implies acceleration of $2g$.

3.5.2 The test load and the procedure of testing are specified in 3.12, Part II "General Freight Containers" and 6.5 of ISO 1496-5.

3.6 STRENGTH OF END WALLS (WHERE PROVIDED)

3.6.1 This test shall be carried out to prove the ability of a platform-based container to withstand forces under the dynamic conditions referred to 3.5.1.

3.6.2 The test load and the procedure of testing are specified in 3.13, Part II "General Freight Containers" and 6.6 of ISO 1496-5.

3.6.3 In the case of non-symmetrical construction, the platform-based container shall have both end wall tested.

3.6.4 The platform-based container shall be subjected to an internal loading of $0{,}4Pg$. The internal loading shall be uniformly distributed over the wall under test providing its free deflection.

3.6.5 Strength tests of end walls are not applied for platform-based containers:
with freestanding fixed posts or with removable top feature (type code P2)
with freestanding folding posts or with removable top feature (type code P4).

3.7 ROOF STRENGTH (WHERE PROVIDED)

3.7.1 This test shall be carried out to prove the ability of the rigid roof of a container, where fitted, to withstand the loads imposed by persons working on the roof.

3.7.2 The test load and the procedure of testing are specified in 3.8, Part II "General Freight Containers" and 6.7 of ISO 1496-5.

3.7.3 Roof strength test is only applicable for platform-based containers with complete superstructure and with open end walls (type code P5).

3.8 FLOOR STRENGTH

3.8.1 This test shall be carried out to prove the ability of a container floor to withstand the concentrated dynamic loading during cargo operations involving trucks or similar devices.

3.8.2 The test load and the procedure of testing are specified in 3.9, Part II "General Freight Containers" and 6.8 of ISO 1496-5.

3.9 TRANSVERSE RACKING (NOT APPLICABLE TO PLATFORM CONTAINERS)

3.9.1 This test shall be carried out to prove the ability of a container, other than a platform container, to withstand the transversal racking forces resulting from ship movement.

3.9.2 The test load and the procedure of testing are specified in 3.10, Part II "General Freight Containers" and 6.9 of ISO 1496-5.

3.9.3 In the case of containers of type code P2 or P4, in order to represent typical service conditions as closely as practicable, the top corner fittings at the end or ends of the

container under test should be connected transversally by means of a member or members representing the lower transverse member(s) in the end frame(s) of a superimposed container. The representative member(s) shall be securely attached to the corner fittings so that the loads will be equally applied to the two posts.

N o t e . The satisfactory completion of this test by a platform-based container of type code P2 or P4 implies that each post can be subjected to a maximum transverse racking loading of 75 kN in service.

3.9.4 In the case of a container with identical ends, only one end need be tested. Where an end is not essentially symmetrical about its own vertical centreline, both sides of that end shall be tested.

3.9.5 Allowable deflections under full test loading are given in 2.4.

3.10 LONGITUDINAL RACKING (NOT APPLICABLE TO PLATFORM CONTAINERS)

3.10.1 This test shall be carried out to prove the ability of a platform-based container to withstand the longitudinal racking forces resulting from ship movement.

3.10.2 The test load and the procedure of testing are specified in 3.11, Part II "General Freight Containers" and 6.10 of ISO 1496-5.

3.10.3 For containers with incomplete superstructure total force of 150 kN shall be relatively distributed in the ratio 2:1 between two end walls.

3.10.4 For containers with incomplete superstructure (types P1, P2, P3 and P4), forces of 50 kN shall be applied either separately or simultaneously to each of the top corner fittings on one end of the container in lines parallel both to the base of the container and to the planes of the sides of the container. The forces shall be applied first towards and then away from the top corner fitting.

3.10.5 For containers with complete superstructure (type P5), forces of 75 kN shall be applied either separately or simultaneously to each of the top corner fittings on one end of the container in lines parallel both to the base of the container and to the planes of the sides of the container. The forces shall be applied first towards and then away from the top corner fitting.

3.10.6 In the case of a container with identical ends, only one end need be tested. Where a side is not essentially symmetrical about its own vertical centreline, both ends of that side shall be tested.

3.10.7 Allowable deflections under full test loading are given in 2.5.

3.11 LIFTING BY FORK LIFT POCKETS (WHERE PROVIDED)

3.11.1 All types of containers fitted with fork lift pockets shall be tested.

3.11.2 The test load and the procedure of testing for lifting by fork lift pockets are specified in 3.4, Part II "General Freight Containers" and 6.11 of ISO 1496-5.

3.12 WEATHERTIGHTNESS (WHERE PROVIDED)

3.12.1 The test load and the procedure of testing are specified in 3.15, Part II "General Freight Containers" and 6.12 of ISO 1496-5.

3.13 ADDITIONAL TESTS FOR PLATFORM-BASED CONTAINERS WITH INCOMPLETE SUPERSTRUCTURE AND FOLDING END WALLS (TYPE CODES P3 AND P4), AND OF AN INTERLOCKED PILE OF SUCH CONTAINERS

3.13.1 Stacking of platform-based containers.

3.13.1.1 The test shall be carried out to prove the ability of a folding platform-based container, in the folded condition, to support a superimposed mass of fully loaded stacked containers, taking into account acceleration resulted from ship movement.

3.13.1.2 The test load and the procedure of testing are specified in 3.7, Part II "General Freight Containers" and 7.2 of ISO 1496-5.

3.13.1.3 The container shall be subjected to vertical forces applied either to all four features (refer to 2.2.2) provided for stacking.

3.13.2 Lifting of an interlocked pile by the top (refer to 7.3 of ISO 1496-5).

3.13.2.1 The test shall be carried out to prove the ability of the platform-based container connected to an interlocked pile to withstand the action of vertically forces applied to designated features (refer to 2.2.3).

3.13.2.2 The platform-based container shall be connected by means of interlocking devices or by its integral interlocking devices (where fitted) to another platform-based container or to a test fixture which simulates a second container, so that the gross mass lifted by the container under test is $(2N-1)T$, where N is the largest number of interlocked units having a combined height of less than 2896 mm and T is tare mass, kg. The combined units shall be carefully lifted from all four top corners in such a way that no significant acceleration or deceleration forces are applied.

3.13.3 Lifting of a flush folded platform-based container by the top (refer to 7.4 of ISO 1496-5).

3.13.3.1 This test shall be carried out to prove the ability of a flush folded platform-based container (type P3 and type P4) to withstand lifting forces applied vertically.

The container shall be folded until the top surface is substantially flush to form a platform and shall have a load uniformly distributed over the floor in such a way that the total own mass of the container and test load is equal to $2R$.

3.14 CARGO-SECURING DEVICES

3.14.1 For proof testing of cargo-securing devices, a tensile force equal to 1,5 times the rated load shall be applied, using a hook or shackle having a minimum diameter of 10 mm, the base frame of the container being approximately horizontal.

3.14.2 For cargo-securing devices positioned along the length of the container, this test force shall be applied in a transverse plane and at an angle of 45° to the horizontal (refer to Fig. 3.14).

3.14.3 For cargo-securing devices positioned across the width of the container, this test force shall be applied in a longitudinal plane and at an angle of 45° to the horizontal (refer to Fig. 3.14).

3.14.4 For cargo-securing devices installed at positions above the floor plane, the test force shall wherever possible be applied at 45° upwards and downwards from the horizontal plane. For devices installed close to the top of the container the test angle shall be 45° downwards (refer to Fig. 3.14).

The tensile force shall be continuously applied at the specified angle for 5 min.

3.14.5 When containers are fitted with cargo-securing devices of different types, at least one device of each type shall be tested.

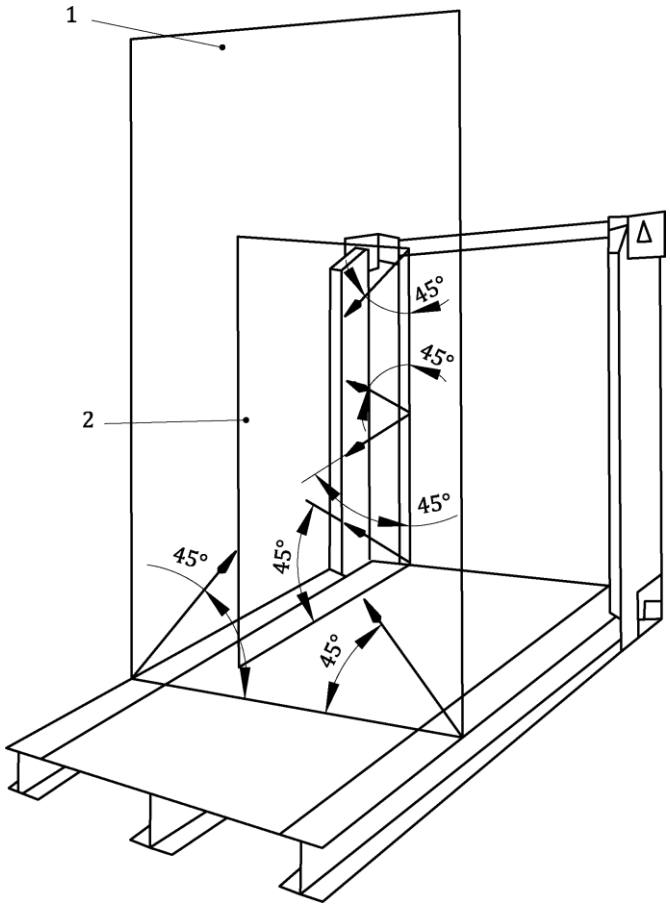

Fig. 3.14:

1 – transverse plane; 2 – longitudinal plane

3.14.6 On completion of the test, the cargo-securing devices, or their attachment to the container structure, or the container structure itself shall not show any permanent deformation or abnormality which will render them unsuitable for continuous service at full rated load.

3.15 INSPECTIONS

3.15.1 The platform containers and platform-based containers shall undergo the inspections stated in 3.17, Part II "General Freight Containers" insofar as these inspections are applicable.

PART VI. NON-PRESSURIZED DRY BULK CONTAINERS

1 GENERAL

1.1 APPLICATION

1.1.1 The provisions of this Part apply to containers for the non-pressurized dry bulk cargoes.

1.1.2 Non-pressurized dry bulk containers shall comply with requirements of Part I "Basic Requirements" and with requirements of this Part.

1.1.3 Containers intended for the transportation of dangerous dry bulk cargoes are subject to special consideration by the Register in each case.

1.2 DEFINITIONS AND EXPLANATIONS

1.2.1 The definitions and explanations relating to the general terminology of these Rules are given in 1.1 of the General Regulations for the Technical Supervision of Containers For the purpose of this Part the following definitions and explanations have been adopted.

Cargo capacity (body) means the space within the container bounded by the end and side walls, bottom and roof or within a soft cover (tarpaulin, plastics, etc.) in case of non-hermetic containers.

Non-pressurized dry bulk container means a container used for the transportation and storage of unpackaged solid bulk cargoes, equipped with devices for gravity loading and discharge.

Non-pressurized bulk container of "box" type means a container with rectangular cargo space, provided with a door opening at least in one end wall and with gravity discharge. Such container may be used as a general freight container.

Non-pressurized bulk container of "hopper" type means a container without door openings and having discharge devices arranged in horizontal plane.

Bulk density is the mass per unit volume of dry bulk solids.

Dry solids in bulk mean assemblies of separate solid particles normally in contact with one another and capable of fluid flow.

1.3 SCOPE OF TECHNICAL SUPERVISION

1.3.1 Technical supervision of the Register shall cover:

.1 framework (bearing structure);

.2 walls, floor, roof, doors and door locks for the "box" type containers;

.3 corner fittings;

.4 walls, floor, roof, loading/discharge devices for "hopper" type containers.

1.4 TECHNICAL DOCUMENTATION

1.4.1 The scope of the technical documentation, submitted for consideration, as well as the forms for confirming the compliance of the technical documentation with the RS requirements, are specified in Table 1.4.1 and may be changed upon the agreement with RS.

Table 1.4.1

№		Document name	Set[1]	Review result[2]
1	Technical conditions or technical specification		I	A
2	Prototype static test program, if testing will be carried out at the manufacturer's		II	A
3	Assembly drawing of:			
	.1	container[3]	I	A
	.2	rear end wall	I	A
	.3	front end wall	I	A
	.4	side wall	I	A
	.5	base	I	A
	.7	roof	I	A
	.8	hatch	I	A
	.9	tables (CSC and CCC)	I	A
	.10	marking	I	A
	.11	cover (type of seams and corners) with a cable and its tips for imposing customs stamps and seals	I	A
4	Drawings indicating dimensions and used materials of (if this information is not on the assembly drawings):			
	.1	corner and intermediate posts	II	A
	.2	upper longitudinal, end and intermediate beams	II	A
	.3	lower longitudinal, end and intermediate beams	II	A
	.4	element to which the CCC requirements apply	II	A
	.5	floors (fastening, sealing, dimensions of plywood, boards and configuration of their edges)	II	A
	.6	doors with seals	II	A
	.7	door locks	II	A
	.8	arches for a cover	II	A

[1] In case of submission of technical documentation in parts, documents marked with the number (I) should be submitted with the first part. Documents marked with the number (II) may be submitted with the second and subsequent parts. The volume of technical documentation provided with the first part may be changed upon the agreement with RS.
[2] A — approved; Ag — agreed; FI — for information. If necessary, the documents may be approved and/or agreed subject to the implementation of the comments of the RS letter.
[3] RS may additionally request documents on the floor materials and antiseptic impregnation, coatings and sealing materials used.

Notes: 1. Documents specified in this table may not be provided upon the agreement with RS, if all necessary information is contained in other documents, included in the set of technical documentation.
2. Documents containing information about structural elements that are not applicable to a specific container are not submitted to RS.

2 TECHNICAL REQUIREMENTS

2.1 "BOX" TYPE CONTAINER

2.1.1 No part of the side structure of the "box" type container, when test load is applied to its side walls, shall deflect by more than 40 mm beyond a plane formed by the side faces of corner fittings.

2.2 "HOPPER" TYPE CONTAINER

2.2.1 The walls of the "hopper" type container shall be firmly connected to the structural elements of the container. Supports and attachments of the cargo body to the framework shall not cause dangerous local stress concentration in the structure.

2.2.2 The container shall be capable of withstanding the inertia forces of the cargo, resulting from the motion of the vehicle.

2.2.3 When designing the "hopper" type container the forces of inertia shall be taken to be equivalent to forces of $2Rg$ longitudinally and vertically and Rg laterally. The loads corresponding to these forces may be considered to act individually; they shall be evenly distributed and act through the geometric centre of the cargo body.

2.2.4 With the "hopper" type container being fully laden under transverse restraint test, no part of side structure shall deflect by more than 50 mm beyond a plane formed by the outer faces of corner fittings.

2.3 ADDITIONAL STRUCTURES

2.3.1 The dry bulk containers may be provided with fork lift pockets, grappler arm lifting areas, "gooseneck" tunnel, as well as with ladders and walkways.

2.3.2 The container may be provided with one or several fumigation openings fitted with flanges.

2.3.3 The "hopper" type containers shall have manholes minimum 500 mm in diameter for the purpose of inspection, repair and other works.

2.3.4 The dry bulk containers shall have one or more loading openings, the number, construction and arrangement of which shall be such as to permit even distribution of cargo in the cargo body. Recommended arrangement of loading openings is shown in Fig. 2.3.4.

2.3.5 The dry bulk containers shall have one or more discharge openings, the number, structure and arrangement of which shall be such as to permit complete discharge of cargo by gravity or with the use of discharge devices that produce no vacuum within the cargo body.

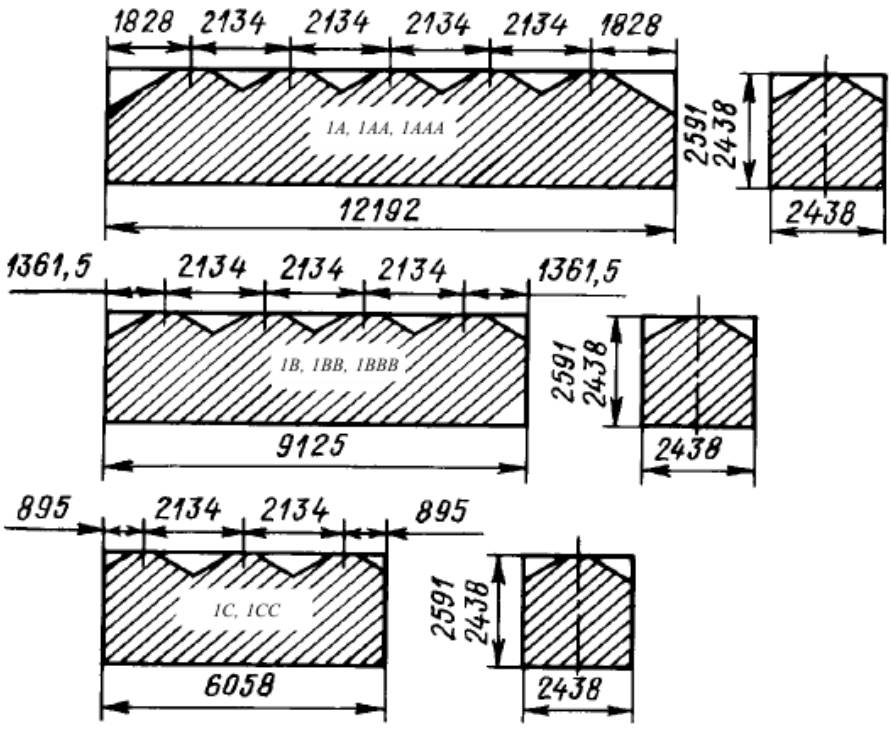

Fig. 2.3.4
Arrangement of loading openings

3 TESTING

3.1 GENERAL

3.1.1 The requirements of this Section apply to dry bulk containers of all dimensions, irrespective of their construction and materials involved.

3.1.2 To achieve the specified test loading, the container shall be loaded with suitable cargo. If the test loading cannot be met or the cargo is undesirable for use, the container shall be loaded with another cargo, with application of a supplementary loading so that the specified value of test loading is reached.

3.1.3 On completion of each test, the container shall show neither permanent deformations nor abnormalities which may render it unsuitable for the designed purpose.

3.1.4 Test loadings and test procedures for lifting, stacking, strength of roof (if any), strength of floor, racking, strength of side walls, longitudinal restraint and weathertightness of "box" type containers are set out in Section 3, Part II "General Freight Containers".

Test loadings during end wall strength test for 1AAA, 1AA, 1A, 1AX, 1BBB, 1BB, 1B и 1BX containers shall be equal to $0{,}4Pg$, while those for 1CCC, 1CC, 1C, 1CX, 1D and 1DX containers shall be equal to $0{,}6Pg$.

3.1.5 Test loadings and procedures for walkways and ladder strength tests are set out in Section 3, Part IV "Tank Containers".

3.1.6 Test loadings and procedures for "hopper" type containers are set out in Section 3, Part IV "Tank Containers", exclusive of 3.7.

3.2 AIRTIGHTNESS TEST

3.2.1 This test shall be carried out after completion of the tests stated in 3.1.4 or 3.1.6.

3.2.2 The container shall be in operating condition. Doorways, manholes and other openings shall be closed in the normal manner.

3.2.3 Air shall be supplied to the container through a connection precluding air leakage. A pressure gauge shall be connected to the container itself. The measuring equipment used in testing shall be verified by a competent body and have an accuracy within the values specified in 4.2.3 of the Rules for Technical Supervision during Manufacture of Containers.

3.2.4 A positive pressure equal to 250±10 Pa shall be produced in the container. The air supplied to the container shall maintain the said pressure. The air leakage from the container shall not exceed the following values:

for 1AAA, 1AA, 1A, 1AX containers 30 m³/h;
for 1BBB, 1BB, 1B, 1BX containers 25 m³/h;
for 1CCC, 1CC, 1C, 1X containers 20 m³/h;
for 1D, 1DX containers – 15 m³/h.

3.2.5 This test shall be carried out, if considered necessary.

3.3 INSPECTIONS

3.3.1 A dry bulk container shall be subjected to inspections according to 3.17, Part II "General Freight Containers".

4 MARKING

4.1 GENERAL

4.1.1 The rear surface of a "hopper" type container shall bear inscription showing capacity of the container in m^3.

If considered necessary, a plate with operation instructions made so as to be fit for continuous use shall be attached to the container at a readily visible place, in immediate proximity to the discharge area. The instructions shall be written both in the national and the English languages.

PART VII. OFFSHORE CONTAINERS

1 GENERAL

1.1 APPLICATION

1.1.1 The requirements of this Part apply to offshore containers with maximum gross mass not exceeding 25 000 kg.

1.1.2 The offshore containers shall comply with the applicable requirements of Part I "Basic Requirements", and with the requirements of this Part. The containers intended for the transportation of dangerous goods shall additionally comply with the requirements of the International Maritime Code for Dangerous Goods Code.

1.1.3 The offshore containers differing in design and dimensions from those defined in this Part are subject to special consideration by the Register in each particular case.

1.2 DEFINITIONS AND EXPLANATIONS

1.2.1 The definitions and explanations related to the general terminology of these Rules are given in 1.1 of the General Regulations for the Technical Supervision of Containers. For the purpose of this Part, the following definitions and explanations have been adopted.

Offshore freight container means a closed container with doors for the transportation of general fright cargoes.

Offshore open top container means a container with an open top for general cargoes or special cargoes.

Offshore tank container means a removable tank (tank container) for the transportation of dangerous or non-dangerous goods.

Offshore tank dry bulk container means a container designed to transport dry bulk cargoes.

Specialized offshore container means a container designed and intended for the transportation of specialized cargoes.

Offshore waste container means an enclosed or open container designed for the transportation and temporary storage of wastes.

Offshore service container means an offshore container designed and equipped for special service tasks, usually as a temporary installation (laboratories, workshops, stores, control stations, etc.).

Note. Not intended for permanent installation on ships and mobile offshore drilling units/fixed offshore platforms.

Maximum gross mass, R, of the offshore container, kg means the maximum gross mass of the container including permanent equipment and its cargo, but excluding the lifting set.

Mass, T, of offshore container, kg means the mass of an empty container including any permanent equipment excluding cargo and lifting set.

S means the mass of the lifting set, kg.

Container payload, P, kg means the maximum permissible mass of cargo that can be safely transported in a container.

Bearing structure means elements of the frame and panel of the container perceiving loads. The bearing structure includes:

m a i n b e a r i n g s t r u c t u r e means the main structural elements of the container that transfer the load created by the cargo to the container lifting equipment hook. The main bearing structure includes, as a minimum, the following elements: top and bottom side rails, top and bottom end rails, corner posts, pad eyes, fork lift pockets, corner fittings (if applicable).

N o t e . Other elements of the bearing structure can also be attributed to the main bearing structure;

s e c o n d a r y b e a r i n g s t r u c t u r e means other structural elements which do not fall under the definition of main bearing structure (floor plates, intermediate bottom rails, components for vessel fastening to the frame, protective frame members, etc.).

N o t e . Side and end panels, as well as the roof panels, are not considered to be part of the secondary bearing structure.

S e c o n d a r y s t r u c t u r e means container parts, which do not transfer the load to the lifting equipment hook. The secondary structure includes: side and end panels, roof panels, doors, panel stiffeners, structural components used for protection of tank container vessels and cargo securing arrangements.

L i f t i n g s e t means items of integrated lifting equipment used to connect the container to the lifting appliance (shackles, hooks, swivels, chains, rings, ropes, etc.).

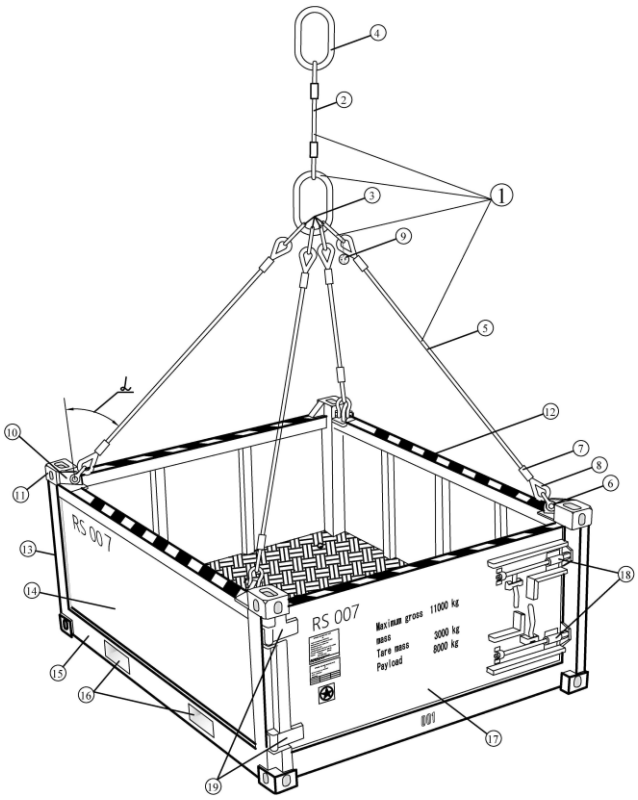

Fig. 1.2.1
Offshore container:

1 – lifting set; 2 – fore runner; 3 – master link + intermediate links; 4 – master link; 5 – sling; 6 – shackle; 7 – bush; 8 – thimble; 9 – marking plate of lifting set; 10 – pad eye; 11 – ISO corner fitting; 12 – top side rail; 13 – corner post; 14 – left wall; 15 – bottom side rail; 16 – fork lift pockets; 17 – door; 18 – door locks; 19 – door hinges

1.3 SCOPE OF TECHNICAL SUPERVISION

1.3.1 Technical supervision of the Register shall cover the following container elements:

.1 main bearing structure (including material);
.2 secondary bearing structure;
.3 tank (including material);
.4 pressure units, cooling and heating appliances;
.5 safety devices (safety valves, frangible discs, melting plugs and vacuum valves), piping, stop valves, cargo level control devices;
.6 stationary refrigeration and/or heating installations, electrical equipment;
.7 floor, loading and discharge devices (for dry bulk containers);
.8 driving ramp;
.9 lifting set.

1.4 TECHNICAL DOCUMENTATION

1.4.1 The scope of the technical documentation, submitted for consideration, as well as the forms for confirming the compliance of the technical documentation with the RS requirements, are specified in Table 1.4.1 and may be changed upon the agreement with RS.

Table 1.4.1

№	Наименование документа		Set[1]	Review result[2]
1	Technical conditions or technical specification		I	A
2	Instruction (manual) for operation		II	Ag
3	Calculation of:			
	.1	of the strength of the supporting and auxiliary structure of an offshore container by the finite element method or by another method that ensures the reliability of the results obtained in accordance with the requirements of 3.1	I	Ag
	.2	of the strength of lifting eyes in accordance with the requirements of 2.2.2, 2.2.3 and 2.2.4	I	Ag
	.3	of the strength of forklift pockets in accordance with the requirements of 3.1.9	I	Ag
4	Program of:			
	.1	prototype testing	II	A
	.2	series testing	II	A
5	Assembly drawing of:			
	.1	offshore container	I	A
	.2	load-bearing structure	I	A
	.3	plates	I	A
	.4	marking	I	A
6	Drawings indicating dimensions and used materials of (if this information is not on the assembly drawings):			
	.1	corner and intermediate posts	II	A
	.2	upper longitudinal, end and intermediate beams	II	A
	.3	lower longitudinal, end and intermediate beams	II	A
	.4	doors	II	A
	.6	lids	II	A
.7	Scheme with the scope of control of welded joints		II	Ag

№	Наименование документа	Set[1]	Review result[2]

[1] In case of submission of technical documentation in parts, documents marked with the number (I) should be submitted with the first part. Documents marked with the number (II) may be submitted with the second and subsequent parts. The volume of technical documentation provided with the first part may be changed upon the agreement with RS.
[2] A — approved; Ag — agreed; FI — for information. If necessary, the documents may be approved and/or agreed subject to the implementation of the comments of the RS letter.

N o t e s : 1. Documents in this Table documents may not be provided upon the agreement with RS, if all necessary information is contained in other documents, included in the set of technical documentation.
2. Documents containing information about structural elements that are not applicable to a specific container are not submitted to RS.
3. Additional scope of technical documentation submitted to RS for consideration for an offshore tank container, an offshore thermal container, an offshore container for bulk cargoes without pressure, etc. see Tables 1.4.1 of the relevant Parts of these Rules.

1.4.2 The documents specified in 1.4.1 and marked with a (*), based on the results of a positive review, are drawn up by stamping 8.2-1 or 8.2-2, and documents marked with a (**), by stamping 8.2-3 or 8.2-4, in accordance with the requirements of Part II "Technical Documentation" of the Rules for Technical Supervision during the Construction of Ships and Manufacture of Materials and Products for Ships.

2 TECHNICAL REQUIREMENTS

2.1 GENERAL

2.1.1 A container shall have sufficient strength to allow loading and unloading from vessels offshore operating in a sea state with significant wave heights of 6 m.

2.1.2 To prevent the containers from overturning (tipping) on a moving deck, they shall be designed to withstand tilting of 30° in any direction, without overturning when loaded at its maximum gross mass, with the centre of gravity considered to be at the half height of the container.

N o t e . For tank containers and specialized containers, the centre of gravity shall be taken as the actual centre of gravity.

2.1.3 Protruding parts on the outside of the offshore container that may catch other containers or structures shall be avoided. In any case, door handles, hatch cleats, or other protruding parts shall be so placed and so protected that they do not catch the lifting set.

2.1.4 Where containers are designed for stacking, the top corners of the container shall be raised to sufficient height above the roof and the top frame to prevent damage to the lifting set.

As a rule, it is permitted to stack the loaded containers ashore or at the drilling rig stacked in two layers, which shall be confirmed by calculations or other method agreed by the Register.

Stacking the trapezoidal waste containers is only permitted in unloaded condition. Stacking of containers during the transportation on supply vessels is not permitted. For the carriage on containerships in stack, containers shall comply with the CSC and ISO 1496 series requirements.

2.1.5 Top and bottom corner fittings complying with the requirements of Part I "Basic Requirements" may be mounted to the containers. Containers shall not be lifted offshore with shackles in these corner fittings.

N o t e . It is recommended not to mount the top corner fittings on containers that have dimensions other than those specified in ISO 668.

2.1.6 The design of the floor of the open top or open walls container, which may be exposed to water, shall have appropriate drainage devices.

2.1.7 Doorways and manholes including hinges and locking devices shall be designed for at least the same horizontal loads as the primary structure. Locking devices shall prevent the opening of doors during transport or lifting of a container. Double-leaf doors shall have at least one such locking device on each door, locks, which shall be located on the upper and lower frame of the container. Locking devices and door hinges shall be protected against movement and damage due to impacts.

2.1.8 Doors shall be fitted with locking devices in the open position. If container weathertightness is required, the doors shall be equipped with seals.

2.1.9 The container shall be made of corrosion resistant materials and/or with the use of corrosion and paint protection. All offshore container roofs, including those constructed from checker plates, shall have a non-slip coating.

2.1.10 Other structural elements: cargo securing devices in the container, fork lift pockets, intermediate cargo decks and driving ramps shall be designed in compliance with the requirements of ISO 10855 and withstand the loads specified therein.

2.1.11 When available, the electrical equipment shall comply with the applicable requirements of Part X "Electrical Equipment" of the Rules for the Classification, Construction and Equipment of Mobile Offshore Drilling Units (MODU) and Fixed Offshore Platforms (FOP).

2.1.12 If there are requirements for fire protection of the container, the requirements of Part VI "Fire Protection" of the Rules for the Classification, Construction and Equipment of MODU/FOP, Part VI "Fire Protection" of the Rules for the Classification and Construction of Sea-Going Ships, Part 3 of the International Code for Application of Fire Test Procedures.

2.1.13 The design of the container shall be designed to meet the requirements of Section 9.

2.1.14 Open frame containers (containers without walls and roofs) and all open top containers with permanent fasteners and equipment (i.e. in case of a risk of crane or lifting device hooking inside the container) shall be supplied with protection on the top.

N o t e . Other types of containers with an open top (open top containers with temporary bolted equipment) are not subject to the requirements hereof, since in such cases the risk of hooking can be promptly eliminated.

2.1.15 Top protection may be fixed, removable or hinged and shall be capable of being securely fitted to the container. Top protection shall be either rigid or flexible; and be made from a robust material (e.g., plates, grating, glass-reinforced plastic, tarpaulin, net/mesh, polyester webbing).

2.1.16 Grating or other rigid top protection of the top part of the container, shall have opening size not more than 1500 mm². Nets and webbing shall have an opening size not more than (50×50) mm.

2.1.17 Rigid top protection shall have a non-slip surface and be designed for a load of 3 kN uniformly distributed over an area of 600×300 mm.

2.1.18 Flexible top protection shall be capable of supporting a central load equal to $0{,}03Rg$. In this case, the design load shall be 1 – 3 kN. The strength of the top protection shall be documented.

Note. Flexible top protection shall be able to support the above mass, without making contact with internal fittings or equipment.

2.1.19 The top protection shall be located as high up as practical, normally not lower than the lower range of the top frame members. Fixtures for the top protection shall be such that they do not cause a snagging hazard.

2.1.20 Where possible, the top protection shall cover the entire roof of the container. Small openings may be incorporated, e.g. for correct operation of the lifting set when a pad eye is located below the top protection.

2.2 PAD EYES

2.2.1 Pad eye structure shall consider size and form of the shackle to be applied, in particular, shackle pin diameter, inner width and length of the shackle as well as free space necessary to install the shackle. General view of a pad eye is shown in Fig. 2.2.1-1.

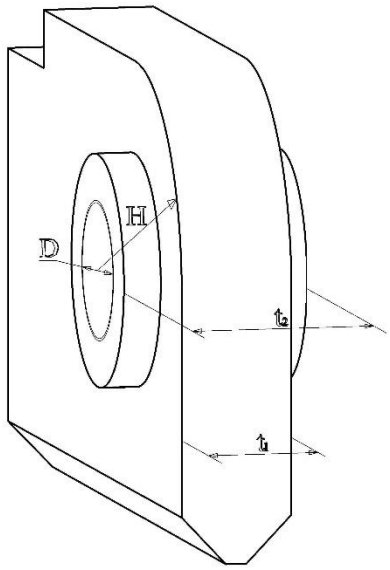

Fig. 2.2.1-1
Pad eye

Shackles are usually designed according to one of the common standards indicated in 9.4.4. Standard shackle sizes according to EN 13889 are given in Table 2.2.1, however, some shackle manufacturers use their own standards, with different design and sizes of shackles.

Table 2.2.1

Nominal WLL	Pin diameter[1]	Inside width at pin	Inside length of dee shackles	Inside length of bow shackles
***WLL*s, t**	***Dn*, mm**	***Wn*, mm**	***S*, mm**	***S*, mm**
3,25	19	27	47	57
4,75	22	31	52	65
6,5	25	36	65	76
8,5	28	43	74	88
9,5	32	46,5	83	101
12	35	51,5	87	108
13,5	38	57	104	126
17	42	60	115	139
25	50	74	139	168

[1] According to 9.4.4 the shackle pins shall have a tolerance of –0/+3 % on the diameter.

Since screw pin shackles are not allowed, the pad eyes shall be located so that there is sufficient space to fit shackles with pin, nut and split cotter pins.

2.2.2 Pad eyes shall be designed for a total vertical force of $3Rg$. To determine the design resultant force on the pad eyes, it is necessary to use the formula:

$$F = 3Rg/\big((n-1)\cos\alpha\big) \qquad (2.2.2)$$

where F is the resultant sling force, in N;
g is gravitational acceleration (9,80665 m/s²);
n is the number of pad eyes (not more than 4 and not less than 2);
α is the angle between the lifting sling and the vertical, in deg. (shall not exceed 45˚).

N o t e . For containers with only one pad eye, that pad eye shall be designed for a total vertical force of $5Rg$.

2.2.3 Pad eyes shall be designed so as to withstand the tensile stress

$$R_e \geq (3 \cdot F)/(2 \cdot H \cdot t_1 - D_H \cdot t_1) \quad (2.2.3)$$

where R_e is the yield strength of the pad eye material, in MPa;
F is the resultant force, in N;
H is the shortest distance from the centre of the shackle hole in the pad eye to the edge of the pad eye, mm;
t_1 is the thickness of the pad eye, mm. The thickness of coupling rings (if any) is not considered;
D_H is the diameter of the hole in the pad eye, mm.

2.2.4 Pad eyes shall be designed so as to withstand the contact stress

$$R_e \geq 23{,}7\sqrt{F/(D_H \cdot t_2)} \quad (2.2.4)$$

where R_e is the yield strength of the pad eye material, in MPa;
F is the resultant force, in N;
t_2 is thethickness of the pad eye considering coupling rings (if any), in mm;
D_H is the diameter of the hole in the pad eye, in mm.

2.2.5 In order to prevent lateral bending moments on pad eyes, they shall be aligned together with the attached lifting set slings to the centre of lift, with a maximum deviation of ±2,5°. The pad eyes set vertically and aligned to the centre of lift allow to vary an angle of the lifting set slings to the vertical by means of the lifting sets with slings of different length taking into account that this angle shall be equal to or less than 45°. Containers with pad eyes set at an angle to the vertical shall be provided with the lifting set which has the slings of the length precisely calculated for this angle.

2.2.6 Any difference in the diagonal measurements between lifting point centres shall not exceed 0,2 % of the length of a diagonal, or 5 mm, whichever is the greater.

2.2.7 Pad eye hole diameter shall not exceed more than 6 % of the nominal lifting set shackle diameter.

2.2.8 The thickness of the pad eye near the shackle hole shall not be less than 75 % of the rated internal width of the shackle. It is also required to consider the requirement of 9.4.3.

2.2.9 Pad eyes shall be welded to the frame with full penetration welds. If the lifting force is transferred perpendicularly to rolled steel surface of the pad eyes, steel with specified through thickness properties shall be used (Z-steel).

Pad eyes with a thickness of less than 15 mm shall be made of high strength structural steel with specified through thickness properties (Z-steel).

N o t e . It is recommended to weld the pad eyes to the main bearing structure of the container.

3 STRUCTURAL STRENGTH

3.1 GENERAL

3.1.1 The following minimum material thickness requirements shall apply to container structural members made of steel:

.1 for external parts of corner posts and bottom rails for rails for R≥1000 kg and more – 6 mm, for R < 1000 kg – 4 mm;

.2 for other parts of the primary structure – 4 mm;

.3 for parts of the secondary structure – 2 mm.

3.1.2 The container shall be designed to withstand loads in compliance with the requirements of ISO 10855-1.

The calculation of bearing structure shall include, at least, the following calculation conditions:

.1 lifting with a lifting set;

.2 horizontal impact;

.3 vertical impact.

If the container is fitted with: fork lift pockets, walls, doors and intermediate decks, top protection, they shall also be designed considering the loads specified in ISO 10855-1.

3.1.3 For steel, the allowable stress for calculation conditions for lifting a container using a lifting set and forklift pockets shall be $0{,}85R_e$.

The allowable stress for other calculation conditions shall be R_e for steel.

The value of equivalent stresses for containers made of other materials is subject to special consideration by the Register.

3.1.4 Deflections when designing corner posts and bottom side rails for horizontal shock loads shall not exceed $l_n/250$, where l_n is the length of the post or rail, in mm.

The deflections when designing other structural members of the container for horizontal shock loads shall not exceed $l_n/250$, where l_n is the length of the shortest element divided by another structural member of the container, in mm or for one-piece member l_n is an actual length, in mm.

Deflections in the calculation of the side and end rails of the container structure for vertical shock loads shall not exceed $l_n/250$, where l_n= the length of the rail, in mm.

3.1.5 The strength of the container is determined by calculation and is confirmed by testing, the scope of which is specified in Section 8.

3.1.6 Equipment for containers handled in open seas shall be designed and installed to withstand the dynamic loading and other forces to which it may be exposed in service.

3.1.7 The following factors shall be used for equipment design:

.1 dynamic factor $\Psi = 3$;

.2 design factor against breaking (safety factor) $k = 2$.

3.1.8 Equipment permanently installed on a container is considered to be part of the container for certification purposes.

3.1.9 Where fork pockets are provided in the container structure, the bottom side rails shall be additionally calculated to bear shear stress occuring in dangerous vertical areas above and below the fork pockets.

When lifted from pad eyes, the shear stress shall be calculated according to the formula

$$\tau = \frac{F_p}{A_1}, \qquad (3.1.9\text{-}1)$$

where $F_p = (2{,}5 \cdot R \cdot g)\ /\ n$ — shear force appeared in one longitudinal beam when lifted from four pad eyes, in N;

n — number of fork pockets.
A_1 — vertical area above and below the fork pockets, in mm² (refer to Fig. 3.1.9-1).

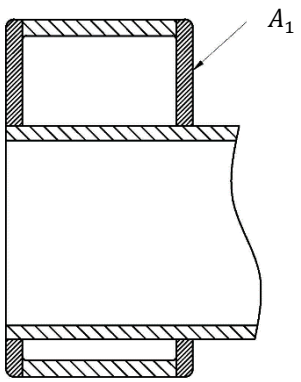

Fig. 3.1.9-1

When lifted from fork pockets, the shear stress shall be calculated according to the formula

$$\tau = \frac{F_f}{A_2}, \qquad (3.1.9\text{-}2)$$

where F_f — shear force appeared when lifted from fork pockets, in N;
for loaded container $F_f = (1{,}6 \cdot (R + S) \cdot g) \,/\, n$;
for empty container $F_f = (0{,}625 \cdot (R + S) \cdot g) \,/\, n$;
where *S* —the lifting set mass;
n — number of fork pockets.
A_2 — vertical area above fork pockets, in mm² (refer to Fig. 3.1.9-2).

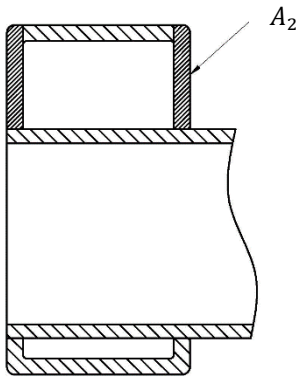

Fig. 3.1.9-2

Permissible shear stress for calculations of bottom side rail with fork pockets shall be determined by the formula

$$\tau_e = 0{,}58 \cdot 0{,}85 \cdot R_e, \qquad (3.1.9\text{-}3)$$

where R_e — yield stress of the pad eye, in MPa.

4 TANK CONTAINERS, DRY BULK CONTAINERS AND THERMAL CONTAINERS

4.1 GENERAL

4.1.1 In addition to the requirements of this Part, the tank container frame shall be designed to protect the vessel and service equipment.

4.1.2 Tank containers designed for the transportation of liquids and non-refrigerated and refrigerated liquefied gases shall also comply with the applicable requirements of Part IV "Tank Containers".

4.1.3 Pressurized dry bulk tank containers shall also comply with the applicable requirements of Part IV "Tank Containers".

4.1.4 Non-pressurized dry bulk containers shall comply with the applicable requirements of Part VI "Non-Pressurized Bulk Containers".

4.1.5 Thermal containers shall also meet the applicable requirements of Part III "Thermal Containers".

4.1.6 Tank containers for dangerous goods shall additionally comply with the following requirements:

.1 the top of the vessel and its fittings shall be protected by beams, plates or grating;

.2 no part of the vessel or its fittings shall extend to within 100 mm of the top of the framework;

.3 it shall not be possible for any part of the lifting set to foul fittings, manhole cleats or other protrusions on the vessel;

.4 protective beams shall be placed at or near the location where the vessel shell is nearest to the outer plane of the sides. Beams shall be spaced sufficiently close together to give the necessary protection;

.5 at the maximum design elastic deflection of any side member, the residual clearance between the member and any part of the vessel shell shall be at least 10 mm;

.6 no part of the vessel, the bottom valves, or other fittings, shall extend below a level 150 mm above the bottom of the framework. Any such part extending to within 300 mm of the bottom of the framework shall be protected by beams or other equivalent means.

5 WELDING

5.1 GENERAL

5.1.1 Welding shall be carried out in accordance with the requirements of 3.7, Part I of these Rules, the requirements of this Section taking into account the Rules for Technical Supervision during the Manufacture of Containers, Materials and Products for Containers.

5.1.2 Main bearing structural members shall be welded with full penetration welds. For other primary structure parts, welding without full penetration welds (fillet welds) may be used subject to special consideration by the Register, having regard to the design and calculations. Intermittent fillet welding of secondary structure is acceptable. Fork lift pockets shall be welded to bottom side rails with full penetration welds.

6 MATERIALS

6.1 GENERAL

6.1.1 Extra high strength steels, with yield stress above 500 N/mm² shall not be used in the container structure.

When materials of different galvanic potential are joined together, the design shall be such that galvanic corrosion is avoided.

6.1.2 The steels used for manufacturing the primary structure shall comply with the requirements of Section 3, Part I "Basic Requirements", be deoxidized and meet the following requirements:

samples impact test temperature for primary structure materials of 12 mm and below in thickness shall be 10 °C above than the minimum operating temperature of the container;

samples impact test for primary structure materials of above 12 mm and below 25 mm in thickness shall be carried out at the minimum operating temperature of the container;

samples impact test for primary structure materials of above 25 mm in thickness shall be 20 °C lower the minimum operating temperature of the container.

N o t e s . 1. Impact tests for austenitic steels shall not be performed unless it is specified in the technical documentation.

2. Impact tests for steels of 6 mm of thickness or less shall not be performed.

6.1.3 Traceability and certificates of primary structure materials shall be provided.

6.1.4 Where other materials are used, they shall comply with the requirements of ISO 10855 1 standard and are subject to special consideration by the Register.

6.1.5 Rubber and other materials used to seal the opening elements of containers shall comply with the requirements of 3.6, Part I "Basic Requirements".

7 MARKING

7.1 SAFETY MARKING

7.1.1 The tops of closed containers and the top rails of fully open containers shall be marked as follows:

.1 closed containers shall be marked with a band of solid contrasting colour 100 mm wide round the roof perimeter using a contrasts colour to the container colour. If the roof of the container is recessed below the top perimeter rails, at least the top surface of the top rail shall be marked;

.2 open and framed containers shall be marked on the top surface of the top rails with hatching of a contrasting colour.

7.1.2 Where the container is fitted with fork pockets for handling the container only when empty, the "Empty lift only" marking shall be displayed near each pair of pockets. The letters shall be not less than 50 mm high.

N o t e . The marking may be in the national language if required by the customer.

7.1.3 Side surfaces of aluminum containers shall be additionally marked as follows: "ALUMINIUM CONTAINER". The height of the charactersshall be at least 75 mm.

7.2 IDENTIFICATION MARKING

7.2.1 Each container shall have the manufacturer's serial number welded on in characters at least 50 mm.

N o t e . It is recommended to place the serial number on the rear bottom end rail of the container. The rear side of the container is a wall with a gate.

7.2.2 Each container shall be marked with the number of the owner. The number of the owner is applied to all the sides of the container with paint or material with an adhesive layer that contrasts with the container colour. The characters shall be not less than 75 mm. If the container has a roof, the container number shall be displayed marked on it in characters 300 mm high or more.

If the marking of the specified height is impossible due to the roof construction, the marking of the greatest possible height shall be applied. The marking shall be carried out in such a way as to avoid incorrect interpretation, e.g. underlining. Where applicable, the marking shall be positioned near the side of the container in which the door is located.

7.2.3 An information template with indication of Certificate of Freight Container Safety Approval by Design Type (СОД) number shall be welded on each container on the bottom rail from the template side. The plate shall be made of corrosion protection material, rectangular form and at least 150 x 40 mm. The characters shall be at least 10 mm.

7.3 INFORMATION MARKING

7.3.1 Each container shall be marked as follows:

.1 maximum gross mass, in kg;

.2 tare mass, in kg;

.3 payload, in kg.

The characters shall be not less than 50 mm high.

N o t e . Marking shall be made in English. Additionally, marking may be made in the national language.

7.4 ADDITIONAL MARKING

7.4.1 If the container is fitted with an intermediate cargo deck, the payload of the deck shall be displayed on the inside of the container in a position where it is clearly visible at all times, using paint or by means of a material with an adhesive layer that contrasts with the colour of the container. The characters shall be not less than 50 mm high.

7.4.2 If applicable, the container shall be marked in accordance with the requirements of Part VI "Fire Protection" and Part X "Electrical Equipment" of the Rules for the Classification, Construction and Equipment of Mobile Offshore Drilling Units (MODU) and Fixed Offshore Platforms (FOP), Part VI "Fire Protection" of the Rules for the Classification and Construction of Sea-Going Ships, applicable international documents upon customer's request, danger signs of electric shock hazard and earthing signs.

7.4.3 If the container is intended for the transportation of dangerous goods, the requirements of IMDG Code regarding marking shall be also met.

7.4.4 General freight containers shall be marked in accordance with the requirements of Section 4, Part I, "Basic Requirements".

7.4.5 Thermal containers shall be additionally marked in compliance with the requirements of Section 4, Part III, "Thermal Containers".

7.4.6 Tank containers shall be additionally marked in compliance with the requirements of Section 4, Part IV "Tank Containers".

7.4.7 Non-pressurized dry bulk containers shall be marked in compliance with the requirements of Section 4, Part VI "Non-Pressurized Dry Bulk Containers".

7.4.8 A Register emblem of the approved type shall be marked on a container manufactured under the Register's technical supervision.

7.4.9 If the container is fitted with a driving ramp, the ramp shall be clearly marked with the maximum permissible axle load, the value of which shall be 0,8 of the test load.

7.4.10 Additional markings may be applied on the container upon the customer's request (such as owner's name, etc.). Additional marking shall be kept to a minimum.

7.5 PLATES

7.5.1 Each container shall be fitted with at least two plates, the information plate and the inspection plate. The data may be combined onto a single plate, the information plate therewith shall be supplemented with the information required for the inspection plate.

Plates shall be made of corrosion resistant material and fitted to a door, or, on containers with no doors, in a prominent position, in a manner designed to avoid unauthorized removal or damage. Aluminium rivets shall not be used for fixing the plates.

All the information on the plates shall be in the English language. In addition to that, provision for a national language may be made.

The text shall be permanently and legibly marked on the plates. The characters shall be not less than 4 mm high.

7.5.2 Information plate.

The format of a plate is shown in Fig. 7.5.2.

The plate shall contain the following information:

.1 identification tag of the container handled in open seas, RS;

.2 serial number;

.3 month and year of manufacture;

.4 maximum gross mass excluding lifting set at the design sling angle, in kg;
.5 tare mass excluding lifting set, in kg;
.6 payload and intermediate deck payload (if applicable), in kg;

OFFSHORE CONTAINER DATE PLATE RS				
Manufacturer's serial number:		…		
Month and year of manufacture:		…		
Maximum gross mass excluding lifting set:	…	kg at	…	from vertical
Tare mass excluding lifting set:		…		kg
Payload:				
Container		…		kg
Intermediate deck		…		kg
RS Certificate No.:		…		
Design temperature:		…		˚C

Fig. 7.5.2.
Information plate

N o t e . Title of a name plate may be as follows: "OFFSHORE CONTAINER DATE PLATE RS/ISO 10855-1".

.7 number of the RS Type Approval Certificate for Offshore Container;
.8 minimum container operating temperature.

7.5.3 Inspection plate.

The format of a plate is shown in Fig. 7.5.3.

OFFSHORE CONTAINER INSPECTION PLATE RS		
Owner's container number:	…	
Owner:	…	
Inspections:	…	

Fig. 7.5.3.
Inspection plate

The plate shall contain the following information:
.1 offshore container inspection plate, RS;
.2 owner's container number;
.3 owner's name;
.4 dates of inspections.

Provision shall be made on the plate to facilitate permanent marking to record a minimum of nine inspections.

N o t e . The requirements for the periodicity of inspections and the markings on the plate are specified in the relevant sections of the Rules for Technical Supervision of Containers in Service.

8 TESTING

8.1 GENERAL

8.1.1 The tests described in 8.2 to 8.3 are required for all offshore container types.

8.1.2 The test loads shall be evenly distributed over the container floor. If it is not possible to place all the test loads inside the container, some of it may be placed outside or under the container, provided that this gives a loading on the structure similar to the distribution of the container loading in operating condition.

N o t e . Loads used in the tests shall comply with the requirements of ISO 10855-1.

8.1.3 If the container has an additional cargo deck, the test load shall be evenly divided between the floor and the cargo deck.

8.1.4 The test devices for creating the required test loadings shall not interfere with free deflection of container sections under test.

8.1.5 On completion of each test, the container shall show neither permanent deformation nor abnormalities which may render it unsuitable for the designed purpose.

8.1.6 The Register may require inspecting of the most loaded welds on completion of the nondestructive testing agreed with the Register.

8.1.7 Auxiliary containers may be tested without insulation and equipment installed.

8.1.8 The minimum number of containers from the batch subject to the all points lifting testing in case of series manufacture is specified in Table 8.1.8.

Table 8.1.8

Batch size	Number of containers*
1 – 5	1
6 – 10	2
11 – 20	3
21 – 40	4
> 40	10 %
* – the number is specified with due account for container prototype testing.	

8.2 LIFTING

8.2.1 Basic requirements.

The container shall be carefully lifted in such a way that no significant acceleration forces occur. After lifting the container shall be suspended for at least 5 min. The container shall be lifted by a lifting set with an angle to the vertical equal to the design angle. The lifting set normally fitted to the container during operation shall not be used at tests.

8.2.2 All-point lifting.

8.2.2.1 The container shall have a uniformly distributed load such that the combined mass of the container and test load is equal to $2{,}5R$ and be lifted using all the pad eyes.

8.2.2.2 Elastic deflections during testing shall not be greater than $l/300$ of the length of any member.

8.2.3 Two-point lifting.

A container fitted with four pad eyes shall be lifted using two pad eyes located diagonally opposite each other. The container shall have a uniformly distributed load such that the combined mass of the container and test load is equal to $1{,}5R$.

N o t e . For containers with a non-symmetrical design, a two-point lift test shall be carried out for each pair of pad eyes.

8.3 VERTICAL IMPACT TEST

8.3.1 The container, loaded to its gross mass R with a load secured inside the container, shall be either lowered or dropped on to a rigid floor.

N o t e s : 1. This floor may be covered with a sheathing of wooden planks with a thickness not exceeding 50 mm.
2. If the container is tested by lowering, the lowering speed shall be as high as practicable.

8.3.2 In both cases, the container shall be so inclined that each of the bottom side and end rails connected to the lowest corner forms an angle of not less than 5° with the floor on to which the container is lowered or dropped. However, the greatest height difference between the floor and the highest and lowest point of the underside of the container corners shall not be more than 400 mm.

8.3.3 The impacting corner shall be the one expected to have the lowest rigidity. On closed general freight containers with doors this will normally be at the door end.

8.3.4 No permanent deformation shall occur during the tests, which could render the container incapable of being used for its designed purpose. There may be minor cracks in welds and minor deformations which may be repaired.

8.3.5 The following test procedures may be used.

8.3.5.1 Drop test.

At drop test, the container shall be suspended from a quick release hook. When released, the container, inclined as per 8.3.2, shall drop freely for at least 50 mm to give it a speed at initial impact of at least 1 m/s.

8.3.5.2 Lowering test.

At lowering test, the container shall be lowered at a speed of not less than 1,5 m/s.

8.4 OTHER TESTS

8.4.1 Container with fork pockets designed for loaded lifting shall be loaded to a total mass of $1{,}6(R + S)$ with regard for the lifting set mass and lifted using the fork pockets. No deflections during testing shall be greater than $l/300$ of the length of any member. The container shall show no permanent deformation or other damage after testing.

8.4.2 The tank of tank containers and its equipment shall be subjected to the applicable tests in compliance with the requirements of Part IV "Tank Containers".

8.4.3 Thermal containers shall be subjected to the applicable tests in compliance with the requirements of Part III "Thermal Containers".

8.4.4 Load securing devices of general freight containers shall be tested in compliance with 3.16, Part II "General Freight Containers" with due regard for the design load of 10 kN.

8.4.5 Hermetically closed containers shall be tested for weathertightness (irrigation) in accordance with the requirements of 3.15, Part II "General Freight Containers".

N o t e . Each container shall be subject to testing.

8.4.6 Driving ramp approach shall be tested in compliance with ISO 10855-1.

8.4.7 The Register may require to carry out additional tests depending on the type and design of the container.

9 LIFTING SET

9.1 GENERAL

9.1.1 Application.
The requirements of this Section apply to the lifting sets and their items used on offshore containers.

9.1.2 Technical documentation.
The technical documentation to be submitted for approval shall contain the following:

9.1.2.1 For ready-assembled lifting sets:

.1 technical conditions or specification (for firms for which the development of technical conditions is not provided according to the applied normative documents) with the data on the standards it complies with, information on accessories, technical characteristics, periodicity and methods of in-service inspections;

.2 assembly drawings of the lifting set, drawings of components and parts (if necessary);

.3 a marking drawing;

.4 a list of lifting set items suppliers;

.5 a test program for a prototype and serial products;

.6 copies of certificates for materials.

The extent of the documentation is the minimum required.

9.1.2.2 For lifting set items:

.1 technical conditions (technical specification) with the data on the standards it complies with, grades of materials, operating temperature range, dimensions, working load limits, test loads, breaking forces;

.2 drawing of each component;

.3 list of suppliers, if applicable;

.4 test program for a prototype and serial products.

The extent of the documentation is the minimum required.

9.2 TECHNICAL REQUIREMENTS

9.2.1 The lifting set shall be designed for use on offshore containers. The lifting set shall not be withdrawn from the container in use unless for repairs or replacement.

N o t e . Lifting set of an auxiliary offshore container may, in justified cases, be removed from the container for the period of long-term stay ashore or on the drilling rig.

9.2.2 The lifting set slings (wire ropes or chains) shall be fastened to pad eyes using shackles complying with 9.4.

9.2.3 Slings shall be designed for use at a certain angle to the vertical of 45° and less.

9.2.4 In order to facilitate container handling and enhance safety, the lifting sets fitted with an additional fore runner and a master (top) link are recommended. The master (top) link shall have dimensions adequate for hooking on cargo handling hooks. The master (top) links of inner dimensions shall be at least 270×140 mm.

9.2.5 Hinge joints for lifting sets are not permitted.

9.2.6 For easy handling of containers the lifting set slings shall be of sufficient length to ensure the master (top) link being at a height of no more than 1,3 m above the container bottom with the slings hanging over the longest side of the container.

9.2.7 Where two 2-leg slings are selected to function as a 4-leg sling, they shall be calculated as for a 4-leg sling.

9.3 STRENGTH

9.3.1 In order to determine the characteristics and dimensions of lifting sets and items thereof, the required minimum working load limits (WLL_{min}), specified in Table 9.3.1 shall be used. To allow for the dynamic amplification that will be experienced when lifting the containers handled in open seas, the maximum gross mass of containers specified in Table 9.3.1 shall be multiplied by a corresponding enhancement factor.

Table 9.3.1

Maximum gross mass, R, kg	Enhancement factor	Minimum required working load limit (WLL_{min}), tonnes
500	–	7,00
1000	–	7,00
1500	–	7,00
2000	3,500	7,00
2500	2,80	7,20
3000	2,600	7,80
3500	2,403	8,41
4000	2,207	8,83
4500	2,067	9,30
5000	1,960	9,80
5500	1,873	10,30
6000	1,766	10,60
6500	1,733	11,26
7000	1,700	11,90
7500	1,666	12,50
8000	1,633	13,07
8500	1,600	13,60
9000	1,567	14,10
9500	1,534	14,57
10000	1,501	15,01
10500	1,479	15,53
11000	1,457	16,02
11500	1,435	16,50
12000	1,413	16,95
12500	1,391	17,38
13000	1,368	17,79
13500	1,346	18,18
14000	1,324	18,54
14500	1,302	18,88
15000	1,280	19,20
15500	1,267	19,64
16000	1,254	20,06
16500	1,240	20,47
17000	1,227	20,86
17500	1,214	21,24
18000	1,201	21,61

Maximum gross mass, R, kg	**Enhancement factor**	**Minimum required working load limit (WLL_{min}), tonnes**
18500	1,188	21,97
19000	1,174	22,31
19500	1,161	22,64
20000	1,148	22,96
20500	1,143	23,44
21000	1,139	23,92
21500	1,135	24,39
22000	1,130	24,86
22500	1,126	25,33
23000	1,121	25,79
23500	1,117	26,25
24000	1,112	26,70
24500	1,108	27,15
25000	1,104	27,59

9.3.2 The minimum required working load limit for the lifting set items (chains, ropes, links, shackles) shall be determined by Table 9.3.2

Table 9.3.2

Minimum required working load limits for the liftig set items ($WLLs_{min}$)

Four-leg sling	Two-leg sling	One-leg sling
$WLL_{min}/3\cos\propto$	$WLL_{min}/2\cos\propto$	WLL_{min}
Note. α is an angle between the lifting set sling and the vertical.		

9.3.3 For additional fore runners and master (top) links:$WLLs_{min} = WLL_{min}$.

9.3.4 The lifting set items shall be selected considering the$WLLs_{min}$values calculated according to recognized standards.

9.3.4 Examples of calculations for wire rope and chain slings of lifting sets are given in Appendix 1.

9.4 LIFTING SETS ITEMS

9.4.1 The lifting set items like chains, ropes, shackles, connecting, intermediate and master links shall comply with the requirements of these Rules. Lifting sets items manufactured in compliance with the requirements of standards which differ from those specified in this Part of the Rules are subject to special consideration by the Register.

9.4.2 Chain slings shall comply with EN 818-4.

9.4.3 Rope slings shall comply with EN 13414-1 with due regard to the requirements of this Part of the Rules. Ropes shall be of steel wire and may have a steel or fiber core. The ropes shall be of marking group 1770 or 1960 and shall be of type 6×19 or 6×36. The sling ends shall terminate with a thimble by pressing in bush or socket and shall comply with EN 13411-3.

End terminations pressed in bush which permit the tail end of the rope to be visible are recommended.

The thimbles shall comply with EN 13411-1 or OST 5.2313-79.

9.4.4 The shackles shall be Grade 6 or 8 and shall comply with EN 13889 or EN 1677-1 or ABNT NBR 13545 with due regard to the requirements of this Part of the Rules.

The shackle pins shall be with hexagon head, hexagon nut and split cotter pin. The tolerance on the nominal diameter of the shackle pin shall be 0 + 3%.

9.5 MATERIALS

9.5.1 The materials used for manufacture of the lifting set items shall meet the requirements of the standards specified in 9.4, additional requirements of this Part of the Rules, possess sufficient ductility at low temperatures and withstand dynamic loads.

9.5.2 The steels used for manufacture of the lifting set items shall be impact tested in accordance with the requirements of 3.2.8, Part I "Basic Requirements" at the minimum working temperature. The minimum average impact energy in testing shall be not less than 42 J. Testing of materials for manufacture of ropes, bushes and thimbles may be exempted.

9.5.3 For welded lifting set items (chains links, rings, etc.), it shall be sufficient only to take impact test samples in the weld with the V-notch centred in the weld line. The weld line shall be accurately identified by etching with a suitable reagent before cutting the notches. The minimum average impact energy obtained during testing shall be not less than 27 J. For the lifting set components subject to heat treatment, the test specimens shall be heat-treated prior to testing as per the modes complying with the heat treatment of finished products or the lifting set in assembly, according to the approved technical documentation.

9.5.4 Galvanizing of lifting sets items shall be carried out in accordance with ISO 10855–2.

9.6 TESTING

9.6.1 Materials shall be tested in compliance with 9.5.

9.6.2 Tests of the assembled lifting set prototypes and the items thereof, as well as tests in serial production shall be conducted at the manufacturer or at the laboratory recognized by the Register in the presence of the Register surveyor.

9.6.3 The scope of tests of the lifting set items shall comply with the requirements of the standards listed in 9.4, as well as of the approved technical documentation.

9.6.4 During manufacture of rope lifting sets from ropes supplied without the Register documents the overall rupture strength of the rope shall be tested at one specimen of each rope tier after end termination. If the rope is supplied with the Register documents this test is not required.

9.6.5 Rope lifting sets shall be tested in operation for a load equal to $2 \times WLL_{min}$.

9.6.6 The test shall be carried out using a correspondingly tared testing machine or by hanging a load of a certain mass. The guaranteed accuracy of testing machines shall be ±2 % that shall be supported by the relevant document.

9.6.7 The test load is applied statically, and the holding time under load shall be at least 5 min.

9.6.8 Testing of the prototypes and type-series of chain lifting sets are carried out in accordance with the requirements of EN 818-4.

9.6.9 No permanent deformations and damages preventing the safe use of the lifting set and its items according to their purpose shall be detected after testing.

9.7 MARKING

9.7.1 The lifting set items shall be marked in accordance with the requirements of applicable standards and this Chapter.

9.7.2 Shackles shall be indelibly marked with a unique identification. The symbols shall be at least 5 mm in height. The shackle areas with the minimum material stresses shall be marked.

9.7.3 For a rope lifting set, an indelible marking shall be applied to the serial number of the lifting set, the abbreviation "RS", as well as the value WLL_{min} in tons on one of the bushes in the area of the master link, in a manner agreed with the Register. The symbols shall be at least 5 mm in height. Marking shall be applied before testing.

9.7.4 For a chain lifting set, one of the upper rings of the leg shall be marked indelibly with the serial number of the lifting set in a manner agreed with the Register. The symbols shall be at least 5 mm in height. Marking shall be applied before testing.

9.7.5 The lifting set shall be fitted with a metal identification tag attached to its top part. The identification tag shall be 8-sided for chains and round for ropes The tags can be of two types.

9.7.6 The identification tag (Type 1, Fig. 9.7.6) shall include:

.1 RS abbreviation;

.2 number of slings; caliber of chain or diameter of rope slings, including optional top leg (where fitted);

N o t e . Where two 2-leg slings are selected to function as a 4-leg sling, both shall be marked as a 4-leg sling.

.3 manufacturer's mark

.4 maximum sling angle to the vertical;

.5 working load limit ($WLLs$) of shackles, in tonnes;

.6 working load limit (WLL_{off}) of the lifting set, in tonnes, which shall correspond to the maximum gross mass of the offshore container where a lifting set can be used with a set angle to the vertical.

N o t e . The value of the lifting set working load limit may vary from maximum gross mass of the offshore container, to which it is fitted;

.7 mass of the lifting set, in kg;

.8 Register certificate number in the format XX.XXXXX.XXX;

.9 lifting set serial number;

.10 survey type mark (in compliance with the Rules for Technical Supervision of Containers in Service), mark of the survey body and the survey date in YY-MM-DD format;

.11 identification numbers of shackles;

.12 additionally, upon the customer's request, the lifting set owner's name may be applied.

N o t e . If the lifting device complies with the requirements of ISO 10855-2 standard, the plate title can be: RS/ISO 10855-2.

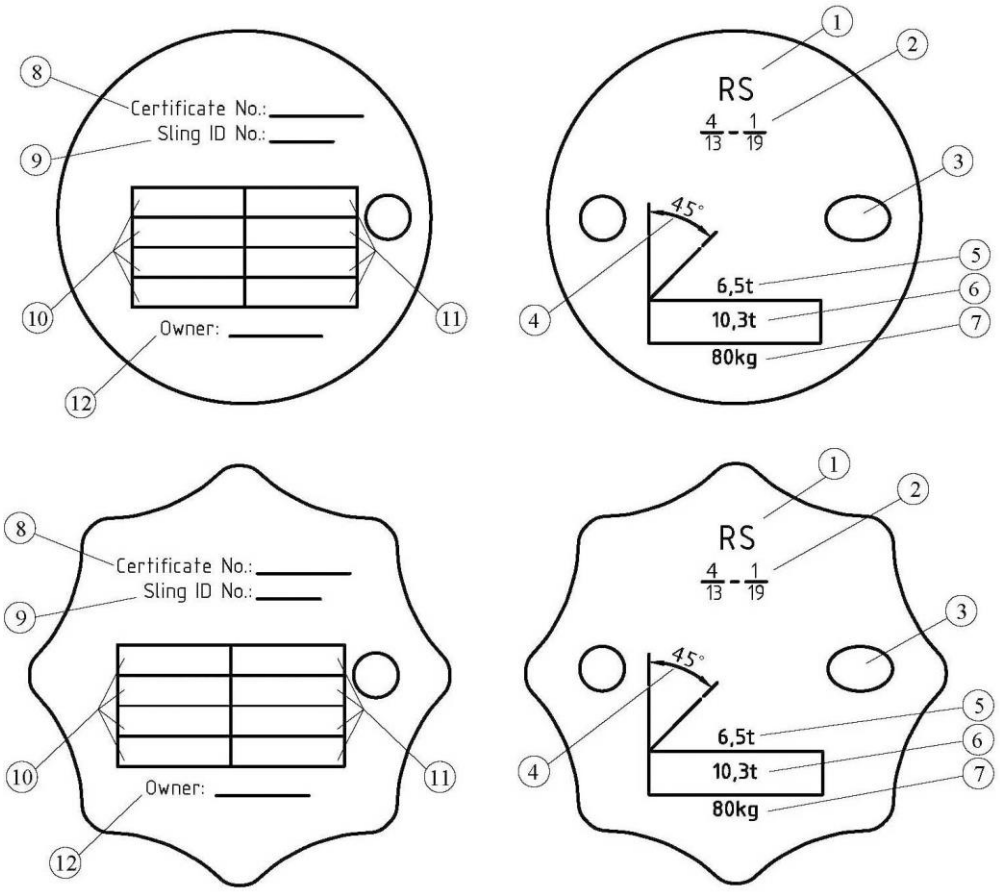

Fig. 9.7.6
Example of identification plate (Type 1)

1 – RS abbreviation; 2 – the number and thickness of slings (13 mm for main slings and 19 mm for additional one); 3 – manufacturer's mark; 4 – maximum sling angle to the vertical; 5 – working load limit of shackles, in tonnes; 6 – working load limit of the lifting set (WLL_{off}); 7 – mass of the lifting set, in kg; 8 – number of the Register certificate; 9 – the serial number of the lifting set; 10 – mark of the survey type, the mark of the survey body that conducted the survey and the survey date in YYYY-MM-DD format; 11 – identification numbers of shackles; 12 – lifting set owner's name

9.7.7 The identification plate marking (Type 2, Fig. 9.7.7) shall include:

.1 RS abbreviation;

.2 QR code of the Register certificate;

.3 Register certificate number in the format XX.XXXXX.XXX;

.4 lifting set serial number;

.5 survey type mark (in compliance with the Rules for Technical Supervision of Containers in Service), mark of the survey body and the survey date in YYYY-MM-DD format;

.6 identification numbers of shackles;

. 7 additionally, upon the customer's request, the lifting set owner's name may be applied.

N o t e . If the lifting set complies with the requirements of ISO 10855-2 standard, the tag title can be: RS/ISO 10855-2.

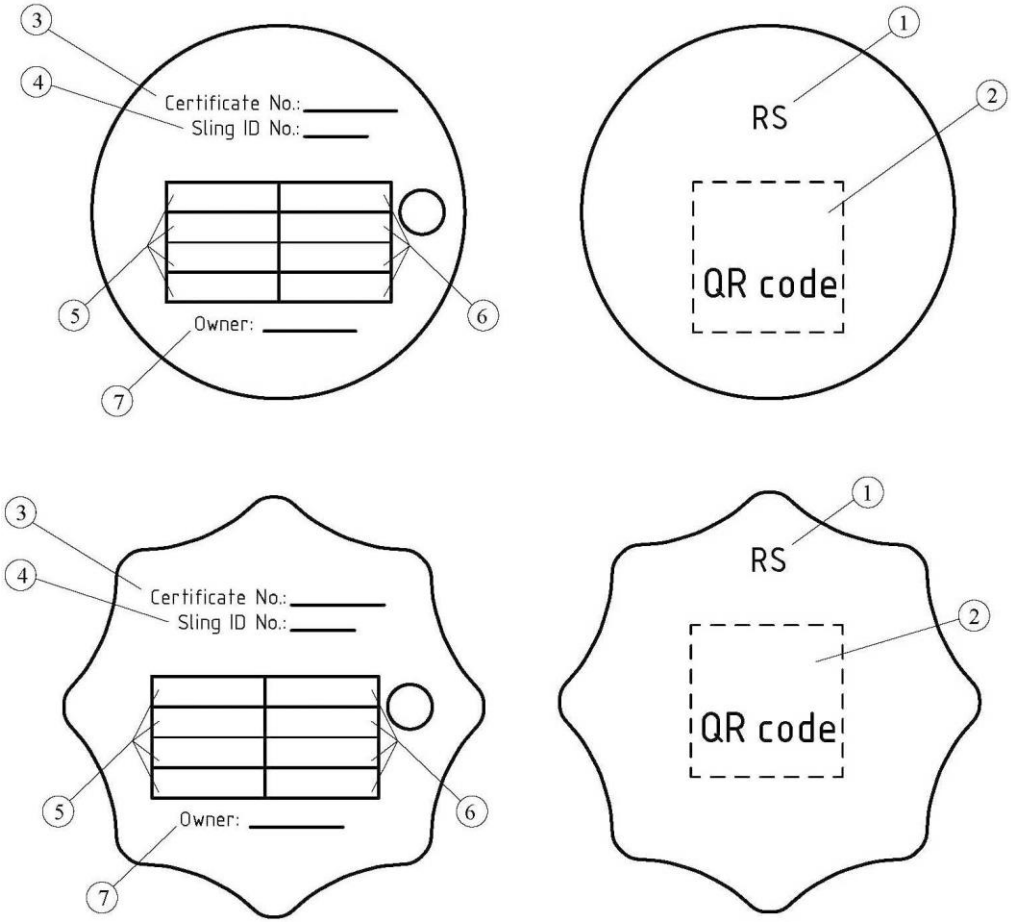

Fig. 9.7.7
An example of identification tag (Type 2)

1 – RS abbreviation; 2 – QR code of the Register certificate; 3 – number of the Register certificate; 4 – the serial number of the lifting set; 5 – mark of the survey type, mark of the survey body that conducted the survey, and the date of survey in the format YY.MM.DD; 6 – identification numbers of shackles; 7 – the lifting set owner's name

APPENDIX 1

CALCULATION OF LIFTING SET SLINGS FOR OFFSHORE CONTAINERS

1 CALCULATION OF WIRE ROPE SLINGS

1.1 Calculation of wire rope slings of the lifting set is performed by the following formula:

$$WLL = \frac{BL_{min} \cdot K_T \cdot n \cdot \cos\beta}{5 \cdot g} \qquad (1.1)$$

where BL_{min} = minimum breaking force of the rope, in kN;
K_T = a factor which allows for the efficiency of the ferrule termination, shall be 0,9;
n = a factor that depends on the number of lifting set slings. For one-leg sling (1СК) *n* = 1, for two-leg sling (2СК) *n* = 2, for four-leg sling (4СК) *n* = 3;
β = angle between the lifting set sling and the vertical, in degrees;
g = factor relating mass to force and has the value = 9,81 m/s^2.

1.2 Dimensions of wire rope slings.

1.2.1 Tables 1.2.1-1, 1.2.1-2, 1.2.1-3 and 1.2.1-4 contain values of working load limits (*WLL*) at different angles for one-, two and four-leg slings with organic core depending on the wire rope diameter.

Table 1.2.1-1

GOST 7668-80, 1770											
Nominal rope diameter	**Working load limits (*WLL*), in t**										
	1СК	**4СК**					**2СК**				
mm	**0°**	**45°**	**40°**	**35°**	**30°**	**25°**	**45°**	**40°**	**35°**	**30°**	**25°**
18,0	3,22	6,83	7,40	7,92	8,37	8,76	4,56	4,94	5,28	5,58	5,84
20,0	3,94	8,37	9,07	9,70	10,25	10,73	5,58	6,05	6,46	6,83	7,15
22,0	4,74	10,07	10,90	11,66	12,32	12,90	6,71	7,27	7,77	8,22	8,60
23,5	5,58	11,84	12,82	13,71	14,49	15,17	7,89	8,55	9,14	9,66	10,11
25,5	6,47	13,73	14,87	15,90	16,81	17,59	9,15	9,91	10,60	11,20	11,73
27,0	7,28	15,44	16,72	17,88	18,90	19,78	10,29	11,15	11,92	12,60	13,19
29,0	8,34	17,70	19,17	20,50	21,67	22,68	11,80	12,78	13,67	14,45	15,12
31,0	9,49	20,13	21,81	23,32	24,65	25,80	13,42	14,54	15,54	16,43	17,20
33,0	10,79	22,90	24,80	26,52	28,03	29,34	15,26	16,53	17,68	18,69	19,56
34,5	11,83	25,10	27,19	29,07	30,73	32,16	16,73	18,12	19,38	20,49	21,44
36,5	12,91	27,39	29,67	31,73	33,54	35,10	18,26	19,78	21,15	22,36	23,40
38,0	14,27	30,27	32,80	35,07	37,07	38,79	20,18	21,86	23,38	24,71	25,86
39,5	15,80	33,53	36,32	38,83	41,05	42,96	22,35	24,21	25,89	27,37	28,64
42,0	17,53	37,21	40,30	43,09	45,56	47,67	24,80	26,87	28,73	30,37	31,78
43,0	18,44	39,13	42,39	45,33	47,92	50,14	26,09	28,26	30,22	31,94	33,43
44,5	20,09	42,64	46,19	49,39	52,21	54,63	28,43	30,79	32,92	34,81	36,42
46,5	21,65	45,95	49,77	53,22	56,26	58,87	30,63	33,18	35,48	37,51	39,25
48,5	23,67	50,23	54,41	58,18	61,51	64,36	33,49	36,27	38,79	41,00	42,91
50,5	25,69	54,51	59,05	63,14	66,75	69,85	36,34	39,37	42,09	44,50	46,57

GOST 7668-80, 1770											
Nominal rope diameter	**Working load limits (*WLL*), in t**										
	1СК	**4СК**					**2СК**				
mm	**0°**	**45°**	**40°**	**35°**	**30°**	**25°**	**45°**	**40°**	**35°**	**30°**	**25°**
53,5	28,81	61,13	66,22	70,81	74,86	78,33	40,76	44,15	47,21	49,90	52,22

Table 1.2.1-2

GOST 7668-80, 1960											
Nominal rope diameter	**Working load limits (*WLL*), in t**										
	1СК	**4СК**					**2СК**				
mm	**0°**	**45°**	**40°**	**35°**	**30°**	**25°**	**45°**	**40°**	**35°**	**30°**	**25°**
18,0	3,50	7,42	8,04	8,59	9,08	9,50	4,95	5,36	5,73	6,06	6,34
20,0	4,28	9,09	9,85	10,53	11,13	11,65	6,06	6,57	7,02	7,42	7,77
22,0	5,15	10,92	11,83	12,65	13,37	14,00	7,28	7,89	8,43	8,92	9,33
23,5	6,20	13,16	14,26	15,24	16,12	16,86	8,77	9,50	10,16	10,74	11,24
25,5	7,03	14,91	16,15	17,27	18,26	19,11	9,94	10,77	11,52	12,17	12,74
27,0	7,90	16,76	18,16	19,42	20,53	21,48	11,18	12,11	12,94	13,68	14,32
29,0	9,06	19,22	20,82	22,26	23,53	24,62	12,81	13,88	14,84	15,69	16,42
31,0	10,30	21,86	23,68	25,32	26,77	28,02	14,58	15,79	16,88	17,85	18,68
33,0	11,72	24,86	26,93	28,80	30,44	31,86	16,57	17,95	19,20	20,30	21,24
34,5	12,84	27,26	29,53	31,57	33,37	34,93	18,17	19,68	21,05	22,25	23,28
36,5	14,02	29,75	32,23	34,46	36,43	38,12	19,83	21,48	22,97	24,28	25,41
38,0	15,45	32,79	35,52	37,97	40,15	42,01	21,86	23,68	25,32	26,76	28,01
39,5	17,16	36,41	39,44	42,17	44,58	46,65	24,27	26,29	28,11	29,72	31,10
42,0	18,90	40,11	43,45	46,45	49,11	51,39	26,74	28,96	30,97	32,74	34,26
43,0	19,82	42,05	45,55	48,71	51,49	53,89	28,04	30,37	32,47	34,33	35,92
44,5	21,74	46,14	49,98	53,44	56,50	59,12	30,76	33,32	35,63	37,67	39,42
46,5	23,49	49,84	53,99	57,73	61,03	63,86	33,23	35,99	38,49	40,69	42,58
48,5	25,60	54,32	58,84	62,92	66,51	69,60	36,21	39,23	41,94	44,34	46,40
50,5	27,71	58,80	63,69	68,10	71,99	75,34	39,20	42,46	45,40	48,00	50,23
53,5	31,28	66,39	71,92	76,90	81,29	85,07	44,26	47,94	51,26	54,19	56,71

Table 1.2.1-3

EN 12385-4, 1770											
Nominal rope diameter	**Working load limits (*WLL*), in t**										
	1СК	**4СК**					**2СК**				
mm	**0°**	**45°**	**40°**	**35°**	**30°**	**25°**	**45°**	**40°**	**35°**	**30°**	**25°**
18,0	3,47	7,36	7,97	8,52	9,01	9,43	4,91	5,31	5,68	6,01	6,29
20,0	4,29	9,11	9,87	10,55	11,16	11,68	6,07	6,58	7,04	7,44	7,78
22,0	5,19	11,02	11,94	12,76	13,49	14,12	7,35	7,96	8,51	9,00	9,41
24,0	6,17	13,08	14,17	15,15	16,02	16,76	8,72	9,45	10,10	10,68	11,18
26,0	7,25	15,38	16,66	17,81	18,83	19,71	10,25	11,11	11,88	12,56	13,14
28,0	8,40	17,83	19,32	20,66	21,84	22,85	11,89	12,88	13,77	14,56	15,23
32,0	10,97	23,29	25,22	26,97	28,51	29,84	15,52	16,82	17,98	19,01	19,89
36,0	13,89	29,48	31,93	34,14	36,09	37,77	19,65	21,29	22,76	24,06	25,18
40,0	17,16	36,41	39,44	42,17	44,58	46,65	24,27	26,29	28,11	29,72	31,10
44,0	20,73	44,00	47,66	50,96	53,88	56,38	29,33	31,78	33,98	35,92	37,59

EN 12385-4, 1770											
Nominal rope diameter	**Working load limits (*WLL*), in t**										
	1СК	**4СК**					**2СК**				
mm	**0°**	**45°**	**40°**	**35°**	**30°**	**25°**	**45°**	**40°**	**35°**	**30°**	**25°**
48,0	24,77	52,57	56,94	60,89	64,37	67,36	35,04	37,96	40,59	42,91	44,90
52,0	28,99	61,52	66,64	71,26	75,33	78,83	41,02	44,43	47,51	50,22	52,55
56,0	33,58	71,26	77,19	82,53	87,25	91,31	47,51	51,46	55,02	58,17	60,87
60,0	38,53	81,77	88,58	94,71	100,12	104,78	54,51	59,05	63,14	66,75	69,85

Table 1.2.1-4

EN 12385-4, 1960											
Nominal rope diameter	**Working load limits (*WLL*), in t**										
	1СК	**4СК**					**2СК**				
mm	**0°**	**45°**	**40°**	**35°**	**30°**	**25°**	**45°**	**40°**	**35°**	**30°**	**25°**
18,0	3,85	8,18	8,86	9,47	10,01	10,48	5,45	5,91	6,31	6,67	6,99
20,0	4,75	10,09	10,92	11,68	12,35	12,92	6,72	7,28	7,79	8,23	8,61
22,0	5,74	12,19	13,20	14,12	14,92	15,62	8,13	8,80	9,41	9,95	10,41
24,0	6,84	14,52	15,73	16,82	17,78	18,61	9,68	10,49	11,22	11,86	12,41
26,0	8,02	17,02	18,43	19,71	20,84	21,80	11,34	12,29	13,14	13,89	14,54
28,0	9,30	19,74	21,39	22,87	24,17	25,30	13,16	14,26	15,24	16,12	16,86
32,0	12,15	25,78	27,92	29,86	31,56	33,03	17,18	18,62	19,90	21,04	22,02
36,0	15,38	32,63	35,35	37,79	39,95	41,81	21,75	23,56	25,20	26,64	27,87
40,0	19,08	40,50	43,87	46,90	49,59	51,89	27,00	29,24	31,27	33,06	34,59
44,0	22,94	48,67	52,73	56,38	59,60	62,37	32,45	35,15	37,58	39,73	41,58
48,0	27,34	58,02	62,85	67,20	71,04	74,34	38,68	41,90	44,80	47,36	49,56
52,0	32,11	68,14	73,82	78,93	83,44	87,31	45,43	49,21	52,62	55,62	58,21
56,0	37,25	79,05	85,63	91,55	96,79	101,28	52,70	57,08	61,04	64,52	67,52
60,0	42,75	90,73	98,28	105,08	111,09	116,25	60,48	65,52	70,06	74,06	77,50

1.2.2 Tables 1.2.2-1, 1.2.2-2, 1.2.2-3 and 1.2.2-4 contain working load limits (*WLL*) at different angles for one-, two- and four-leg slings with metal core depending on the rope diameter.

Table 1.2.2-1

GOST 7669-80, 1770(180)											
Nominal rope diameter	**Working load limits (WLL), in t**										
	1СК	**4СК**					**2СК**				
mm	**0°**	**45°**	**40°**	**35°**	**30°**	**25°**	**45°**	**40°**	**35°**	**30°**	**25°**
16,0	3,03	6,42	6,96	7,44	7,87	8,23	4,28	4,64	4,96	5,24	5,49
17,5	3,60	7,63	8,27	8,84	9,34	9,78	5,09	5,51	5,89	6,23	6,52
19,5	4,45	9,44	10,23	10,94	11,56	12,10	6,30	6,82	7,29	7,71	8,07
21,0	5,31	11,27	12,21	13,06	13,80	14,44	7,52	8,14	8,70	9,20	9,63
23,0	6,26	13,28	14,38	15,38	16,26	17,01	8,85	9,59	10,25	10,84	11,34
25,0	7,27	15,42	16,70	17,86	18,88	19,76	10,28	11,14	11,91	12,59	13,17
26,5	8,15	17,29	18,73	20,02	21,17	22,15	11,53	12,49	13,35	14,11	14,77
28,0	9,29	19,72	21,36	22,84	24,15	25,27	13,15	14,24	15,23	16,10	16,85
30,0	10,62	22,55	24,42	26,11	27,61	28,89	15,03	16,28	17,41	18,40	19,26

GOST 7669-80, 1770(180)											
Nominal rope diameter	**Working load limits (WLL), in t**										
	1СК	**4СК**					**2СК**				
mm	**0°**	**45°**	**40°**	**35°**	**30°**	**25°**	**45°**	**40°**	**35°**	**30°**	**25°**
16,0	3,03	6,42	6,96	7,44	7,87	8,23	4,28	4,64	4,96	5,24	5,49
32,5	12,14	25,76	27,90	29,83	31,54	33,00	17,17	18,60	19,89	21,03	22,00
35,5	14,45	30,66	33,22	35,52	37,55	39,29	20,44	22,14	23,68	25,03	26,19
36,5	16,10	34,17	37,01	39,58	41,84	43,78	22,78	24,68	26,38	27,89	29,19
39,0	17,84	37,87	41,02	43,86	46,37	48,52	25,25	27,35	29,24	30,91	32,35
41,0	19,72	41,86	45,34	48,48	51,25	53,64	27,91	30,23	32,32	34,17	35,76
42,0	20,92	44,39	48,09	51,41	54,35	56,88	29,59	32,06	34,28	36,24	37,92
45,5	24,59	52,18	56,52	60,43	63,89	66,86	34,79	37,68	40,29	42,59	44,57
49,0	28,90	61,33	66,43	71,03	75,09	78,58	40,89	44,29	47,36	50,06	52,39
52,0	32,39	68,73	74,45	79,60	84,15	88,06	45,82	49,63	53,07	56,10	58,71

Table 1.2.2-2

GOST 7669-80, 1960(200)											
Nominal rope diameter	**Working load limits (WLL), in t**										
	1СК	**4СК**					**2СК**				
mm	**0°**	**45°**	**40°**	**35°**	**30°**	**25°**	**45°**	**40°**	**35°**	**30°**	**25°**
16,0	3,28	6,95	7,53	8,05	8,51	8,91	4,63	5,02	5,37	5,67	5,94
17,5	3,91	8,29	8,98	9,61	10,16	10,63	5,53	5,99	6,40	6,77	7,08
19,5	4,83	10,24	11,09	11,86	12,54	13,12	6,83	7,40	7,91	8,36	8,75
21,0	5,75	12,21	13,22	14,14	14,95	15,64	8,14	8,82	9,43	9,96	10,43
23,0	6,76	14,35	15,54	16,62	17,57	18,39	9,57	10,36	11,08	11,71	12,26
25,0	7,87	16,70	18,10	19,35	20,45	21,40	11,14	12,06	12,90	13,64	14,27
26,5	8,82	18,71	20,27	21,67	22,91	23,97	12,47	13,51	14,45	15,27	15,98
28,0	10,05	21,32	23,09	24,69	26,10	27,32	14,21	15,40	16,46	17,40	18,21
30,0	11,50	24,41	26,45	28,28	29,89	31,28	16,28	17,63	18,85	19,93	20,86
32,5	13,14	27,88	30,20	32,29	34,14	35,72	18,59	20,13	21,53	22,76	23,82
35,5	15,64	33,20	35,96	38,45	40,65	42,53	22,13	23,97	25,63	27,10	28,36
36,5	17,43	36,99	40,07	42,85	45,29	47,40	24,66	26,71	28,56	30,20	31,60
39,0	19,17	40,69	44,08	47,13	49,82	52,14	27,13	29,39	31,42	33,22	34,76
41,0	21,47	45,56	49,35	52,77	55,78	58,38	30,37	32,90	35,18	37,19	38,92
42,0	22,66	48,09	52,09	55,70	58,88	61,62	32,06	34,73	37,13	39,26	41,08
45,5	26,70	56,66	61,37	65,62	69,37	72,60	37,77	40,91	43,75	46,25	48,40
49,0	31,28	66,39	71,92	76,90	81,29	85,07	44,26	47,94	51,26	54,19	56,71
52,0	34,95	74,18	80,35	85,92	90,83	95,05	49,45	53,57	57,28	60,55	63,36

Table 1.2.2-3

EN 12385-4, 1770											
Nominal rope diameter	**Working load limits (*WLL*), in t**										
	1СК	**4СК**					**2СК**				
mm	**0°**	**45°**	**40°**	**35°**	**30°**	**25°**	**45°**	**40°**	**35°**	**30°**	**25°**
18,0	3,74	7,94	8,60	9,20	9,73	10,18	5,30	5,74	6,13	6,48	6,79
20,0	4,62	9,81	10,63	11,37	12,01	12,57	6,54	7,09	7,58	8,01	8,38
22,0	5,60	11,88	12,86	13,76	14,54	15,22	7,92	8,58	9,17	9,69	10,15

EN 12385-4, 1770											
Nominal rope diameter	**Working load limits (*WLL*), in t**										
	1СК	**4СК**					**2СК**				
mm	**0°**	**45°**	**40°**	**35°**	**30°**	**25°**	**45°**	**40°**	**35°**	**30°**	**25°**
24,0	6,66	14,13	15,31	16,37	17,31	18,11	9,42	10,21	10,91	11,54	12,07
26,0	7,82	16,59	17,97	19,21	20,31	21,25	11,06	11,98	12,81	13,54	14,17
28,0	9,06	19,24	20,84	22,28	23,55	24,65	12,82	13,89	14,85	15,70	16,43
32,0	11,83	25,12	27,21	29,09	30,75	32,18	16,74	18,14	19,39	20,50	21,45
36,0	14,99	31,81	34,46	36,85	38,95	40,76	21,21	22,97	24,56	25,97	27,18
40,0	18,53	39,33	42,60	45,55	48,16	50,39	26,22	28,40	30,37	32,10	33,60
44,0	22,39	47,51	51,46	55,02	58,17	60,87	31,67	34,31	36,68	38,78	40,58
48,0	26,61	56,46	61,16	65,40	69,13	72,35	37,64	40,77	43,60	46,09	48,23
52,0	31,19	66,20	71,71	76,67	81,05	84,82	44,13	47,80	51,11	54,04	56,55
56,0	36,33	77,10	83,52	89,30	94,40	98,79	51,40	55,68	59,53	62,94	65,86
60,0	41,65	88,39	95,75	102,38	108,23	113,26	58,93	63,83	68,25	72,15	75,51

Table 1.2.2-4

EN 12385-4, 1960											
Nominal rope diameter	**Working load limits (*WLL*), in t**										
	1СК	**4СК**					**2СК**				
mm	**0°**	**45°**	**40°**	**35°**	**30°**	**25°**	**45°**	**40°**	**35°**	**30°**	**25°**
18,0	4,15	8,80	9,53	10,19	10,78	11,28	5,87	6,36	6,80	7,18	7,52
20,0	5,12	10,86	11,77	12,58	13,30	13,92	7,24	7,85	8,39	8,87	9,28
22,0	6,20	13,16	14,26	15,24	16,12	16,86	8,77	9,50	10,16	10,74	11,24
24,0	7,38	15,65	16,96	18,13	19,17	20,06	10,44	11,30	12,09	12,78	13,37
26,0	8,66	18,38	19,91	21,29	22,50	23,55	12,25	13,27	14,19	15,00	15,70
28,0	10,04	21,30	23,07	24,67	26,08	27,29	14,20	15,38	16,45	17,39	18,19
32,0	13,12	27,84	30,16	32,25	34,09	35,67	18,56	20,11	21,50	22,73	23,78
36,0	16,59	35,20	38,13	40,77	43,10	45,10	23,47	25,42	27,18	28,73	30,07
40,0	20,55	43,61	47,24	50,51	53,40	55,88	29,07	31,49	33,68	35,60	37,25
44,0	24,77	52,57	56,94	60,89	64,37	67,36	35,04	37,96	40,59	42,91	44,90
48,0	29,54	62,69	67,91	72,61	76,76	80,33	41,79	45,27	48,41	51,17	53,55
52,0	34,68	73,59	79,72	85,24	90,11	94,30	49,06	53,15	56,83	60,07	62,87
56,0	40,18	85,28	92,37	98,77	104,42	109,27	56,85	61,58	65,85	69,61	72,84
60,0	46,06	97,74	105,87	113,20	119,67	125,23	65,16	70,58	75,47	79,78	83,49

2 CALCULATION OF CHAIN SLINGS

2.1 Calculation on chain slings is performed by the formula

$$WLL = \frac{0{,}5 \cdot \pi \cdot 200 \cdot d_{nom}^2 \cdot n \cdot \cos\beta}{1000 \cdot g} \qquad (2.1)$$

where π = mathematical constant, π = 3,14;

d_{nom} = caliber of chain links (nominal link thickness), in mm;

n = factor that depends on the number of lifting set slings. For one-leg sling (1СК) n = 1, for two-leg sling (2СК) n = 2, for four-leg sling (4СК) n = 3;

β = angle between the lifting set sling and the vertical, in degrees;

g = factor relating mass to force and has the value g = 9,81 m/s^2.

2.2 Dimensions of chain slings.

2.2.1 Table 2.2.1-1 contains values of working load limits (*WLL*) at different angles for one-, two- and four-leg chain strings depending on the chain caliber.

Table 2.2.1-1

EN 818-4, grade 8											
Caliber of chain link	Working load limits (WLL), in t										
	1СК	4СК					2СК				
mm	0°	45°	40°	35°	30°	25°	45°	40°	35°	30°	25°
10,00	3,15	6,68	7,24	7,74	8,19	8,57	4,46	4,83	5,16	5,46	5,71
13,00	5,30	11,25	12,18	13,03	13,77	14,41	7,50	8,12	8,68	9,18	9,61
16,00	8,00	16,98	18,39	19,66	20,79	21,75	11,32	12,26	13,11	13,86	14,50
18,00	10,00	21,22	22,99	24,58	25,98	27,19	14,15	15,33	16,39	17,32	18,13
19,00	11,20	23,77	25,75	27,53	29,10	30,46	15,85	17,16	18,35	19,40	20,30
20,00	12,50	26,53	28,74	30,72	32,48	33,99	17,68	19,16	20,48	21,65	22,66
22,00	15,00	31,83	34,48	36,87	38,98	40,79	21,22	22,99	24,58	25,98	27,19
23,00	16,00	33,95	36,78	39,33	41,58	43,51	22,64	24,52	26,22	27,72	29,00
25,00	20,00	42,44	45,98	49,16	51,97	54,38	28,30	30,65	32,77	34,65	36,26
26,00	21,20	44,99	48,73	52,11	55,09	57,65	29,99	32,49	34,74	36,73	38,43
28,00	25,00	53,05	57,47	61,45	64,96	67,98	35,37	38,31	40,97	43,31	45,32
32,00	31,50	66,85	72,41	77,43	81,85	85,65	44,57	48,28	51,62	54,57	57,10
36,00	40,00	84,89	91,95	98,32	103,94	108,77	56,59	61,30	65,55	69,29	72,51
40,00	50,00	106,11	114,94	122,90	129,92	135,96	70,74	76,63	81,93	86,62	90,64
45,00	63,00	133,70	144,83	154,85	163,70	171,31	89,13	96,55	103,24	109,14	114,21

PART VIII. TANK CONTAINERS WITH FIBER-REINFORCED PLASTICS (FRP) SHELL

1 GENERAL

1.1 APPLICATION

1.1.1 The requirements of this Part apply to tank containers with fiber-reinforced plastics (FRP) shell designed for the transportation of goods of classes 3, 5.1, 6.1, 6.2, 8 and 9 by several modes of transport.

1.1.2 Tank containers with a FRP shell shall meet the requirements of Part I "Basic Requirements", the requirements of Part IV "Tank Containers", except for the requirements applicable to non-refrigerated and refrigerated liquefied gases, to metal materials for the production of tank container shell, as well as the requirements of this Part.

1.1.3 Additional international and national requirements may apply to tank containers with FRP shell used for the transportation of dangerous goods.

1.2 DEFINITIONS AND EXPLANATIONS

1.2.1 The definitions and explanations relating to the general terminology of these Rules are given in Part I "Basic Requirements". Definitions and explanations relating to terminology regarding tank containers are given in Part IV "Tank Containers".

For the purpose of this Part the following definitions and explanations have been adopted.

Veil means thin mate, as usual of 0,18 – 0,51 mm thickness with high absorbency used in FRP product plies where polymeric matrix surplus fraction content is required (surface evenness, chemical resistance, leakage-proof, etc.).

FRP components mean reinforcing fibers (filler), plastic binder (matrix), adhesives, and aggregates.

Structural layers are unidirectional or bidirectional FRP layers in the design of a multi-layer vessel shell that perceive loads during the operation of a tank container.

Reference sample is a sample cut out of a vessel to define the identity of series products to the test/prototype sample.

Liner means a closed part consisting of a chemically resistant layer and FRP layers supporting it.

Mate means fiber reinforcement made or randomly chopped or twisted fibers.

Witness sample means a specimen fabricated as per the procedure identical to production process of the corresponding part of FRP shell.

Flame protection layer means a layer on the outer surface of a tank shell that ensures its protection from external fire.

Fiber -reinforced plastic (FRP) means a structural material that consists of reinforcing fibers (filler), polymer binder (matrix) and is formed directly during the manufacture of a FRP container and its elements.

Design characteristics are the characteristics of FRP structures strength and rigidity obtained by testing coupon-samples with consideration of normative requirements to strength and rigidity factors, and strength criteria assumed for the design of the shell.

Roving is fiberglass harness produced by splicing several glass fibers together.

FRP shell means a closed cylindrical product with openings and their closures, but without service equipment or external structural equipment; it is intended for the storage and transportation of liquid substances including aggressive ones.

Chemically resistant layer means a layer on the inner surface of a multilayer shell of a FRP shell that protects the shell structural layer from the chemical effect of the transported cargo.

Tank means a FRP shell with service and external structural equipment installed on it.

Coupon sample means a FRP specimen manufactured and tested in accordance with national and/or international standards to determine design characteristics.

1.3 TECHNICAL SUPERVISION

1.3.1 In addition to the provisions of 1.3 of Part IV "Tank Containers", the following shall be subject to technical supervision of the Register:

.1 the raw materials and materials used for the manufacture of FRP shells;

.2 process procedures for the manufacture of FRP shells;

.3 representative samples, coupon samples and witness samples.

1.4 TECHNICAL DOCUMENTATION

1.4.1 The scope of the technical documentation, submitted for consideration, as well as the forms for confirming the compliance of the technical documentation with the RS requirements, are specified in Table 1.4.1 and may be changed upon the agreement with RS.

Table 1.4.1

№		Document name	Set[1]	Review result[2]
1		Technical conditions or technical specification	I	A
2		Instruction (manual) for operation	II	Ag
3		Calculation of:		
	.1	tank container for strength in accordance with the requirements of 2.2.8 and 2.2.9 (including 2.2.12, 2.2.13 and 2.2.19), by the finite element method or another method that ensures the reliability of the results obtained	I	Ag
	.2	shell for strength in accordance with the requirements of 3.3.2.3, by the finite element method or another method that ensures the reliability of the results obtained	I	Ag
	.3	shell for strength in accordance with the requirements of national and/or international standards applicable to pressure vessels and applicable to tank containers	I	Ag
	.4	the required capacity of the safety devices	I	Ag
4		List of dangerous goods classes or list of goods (if required in the rules for the carriage of goods, national or international regulations) that can be transported in tank container[3]	II	FI
5		Prototype static test program, if testing will be carried out at the manufacture	II	A
6		Assembly drawing of:		
	.1	tank container	I	A
	.2	shell (indicating the orientation and reinforcement schemes of PCM structural layers and materials used)	I	A
	.3	side and end walls	I	A
	.4	stiffening ring	II	A
	.5	cargo cooling and/or heating systems	II	A
	.6	spill box, if several and different, then each	II	A
	.7	ladder	II	A

№	Document name		Set[1]	Review result[2]
	.8	walkways	II	A
	.9	insulation	II	A
	.10	handrails	II	A
	.11	plates (shell data, CSC and CCC)	I	A
	.12	marking	I	A
7	Drawings indicating dimensions and used materials of (if this information is not on the assembly drawings):			
	.1	corner and intermediate posts	II	A
	.2	attachment points of shell with frame	II	A
	.3	upper longitudinal, end and intermediate beams	II	A
	.4	lower longitudinal, end and intermediate beams	II	A
	.6	manlids and necks (when manufactured at the manufacturer of the tank container)	II	A
	.7	element to which the CCC requirements apply	II	A
	.8	pipelines	II	A
8	Scheme with the scope of control of welded joints		II	Ag
9	Process specification for the manufacture of a FRP shell with an indication of the specifications of the materials used, components and method for monitoring technological defects		II	Ag
10	Specifications of raw materials and components submitted by their manufacturers		II	Ag
11	Program of incoming control of raw materials and components		II	A
12	Technical specifications for FRP shells		I	Ag
13	Instructions for FRP quality control and elimination of impermissible process defects		II	Ag
14	List of permissible process defects and operational damage in compliance with the standards, the use of which has been agreed with the Register, or with the calculation and experimental procedures approved by the Register		II	Ag
15	Test reports for coupon samples		I	FI
16	Methods for determining the design characteristics of FRP used in the shell structure		I	Ag

[1] In case of submission of technical documentation in parts, documents marked with the number (I) should be submitted with the first part. Documents marked with the number (II) may be submitted with the second and subsequent parts. The volume of technical documentation provided with the first part may be changed upon the agreement with RS.
[2] A — approved; Ag — agreed; FI — for information. If necessary, the documents may be approved and/or agreed subject to the implementation of the comments of the RS letter.
[3] RS may additionally request documents confirming the resistance of the materials of the tank container, its fittings and seals to cargo.

N o t e s : 1. Specified in this table documents may not be provided upon the agreement with RS, if all necessary information is contained in other documents, included in the set of technical documentation.
2. Documents containing information about structural elements that are not applicable to a specific container are not submitted to RS.

1.4.2 The extent of the above documentation is the minimum required.

2 TECHNICAL REQUIREMENTS

2.1 BASE STRUCTURE

The base design of the tank containers with a FRP shell shall meet the requirements of 2.1, Part IV "Tank Containers".

2.2 TANKS, SUPPORTS AND ATTACHMENTS

2.2.1 Tanks with a FRP shell shall be designed and manufactured by organizations that have a quality assurance system recognized by the Register, as well as in accordance with the Rules for FRP Pressure Vessels recognized by the Register, taking into account national and/or international standards.

2.2.2 The tank with a FRP shell shall be rigidly connected to the elements of the container frame. Supports and fasteners of the tank to the framework shall not cause dangerous local stress concentrations in the FRP shell in compliance with the provisions specified in this Section.

2.2.3 For tank containers with a FRP shell, the use of heating elements is not allowed.

2.2.4 Components and materials compatible with the transported liquids at operating temperatures from -40 °C to 50 °C shall be used for the manufacture of a FRP shell.

For tank containers operated in severe climatic conditions, the range of design temperatures shall be agreed with the Register.

2.2.5 The multilayer FRP shell shall consist of the following three elements:

internal chemical resistant layer (liner);

construction layers;

outer layer.

2.2.5.1 The inner chemical resistant layer (liner) shall be designed so that it is the main barrier layer providing long-term resistance to the chemical effect of the transported substances and preventing any dangerous reaction with the vessel contents or the formation of hazardous compounds, or any significant reduction in the strength of the structural layers of the vessel due to diffusion transported product through the inner layer (liner).

The inner layer (liner) may be made both of thermoactive FRP and thermoplastic FRP.

Thermoactive FRP liner shall include:

surface chemical resistant layer (gel-coating) consisting of resin and reinforced with a veil compatible with the resin and transported substances. This layer shall contain no more than 30 % of veil by weight and have a thickness of 0,25 – 0,6 mm;

reinforcing layer: one layer or several layers with a total thickness of at least 2 mm that contains at least 900 g/m² of glass mat or FRP randomly reinforced with chopped fibers with a mass fraction of fiberglass of at least 30 %, unless the equivalent level of safety is demonstrated for a lower fiberglass content.

A thermoplastic FRP liner shall consists of the sheets specified in 2.2.6.3 connected to the structural layers of the vessel.

Note. For the transportation of flammable liquids, in accordance with 2.2.24, additional measures may be required to prevent the accumulation of electric charges in the inner layer.

2.2.5.2 The structural layers of the shell is the zone specially designed in accordance with the requirements of 2.2.8, 2.2.9, 2.2.12 and 3.3.2 to withstand design and mechanical

stresses. This part of the vessel consists of several fiber-reinforced layers oriented in preset directions.

2.2.5.3 The outer layer is part of the shell, which is directly exposed to the environment. It shall consist of a single layer with a high resin content, with a thickness of at least 0,2 mm. For a thickness greater than 0,5 mm, a mat shall be used. The mass content of fiberglass in such a layer shall not exceed 30 %.

This layer shall withstand the effects of transported substances in case of accidental contact with them (stpillage, etc.). The resin of the outer layer shall contain fillers and additives that protect the structural layers of the vessel from damage when exposed to ultraviolet radiation and salt fog.

It is allowed to use other materials that provide equivalent protection of the shell wall against external factors, as mentioned above.

2.2.6 Raw materials and components:

.1 resins. When manufacturing a binder and/or mixtures based on original resins, the recommendations of the manufacturer shall be strictly followed.

In manufacturing FRP shells, the following types of resins may be used:

unsaturated polyester resins;

vinyl ester resins;

epoxy resins;

phenolic resins.

The heat distortion temperature (HDT) of the resin determined in accordance with ISO 75-1 shall be at least 20 °C higher than the maximum working temperature of the FRP shell and in all cases shall be at least 70 °C;

.2 reinforcement fibers. Fiberglass of type E or ECR in accordance with ISO 2078 shall be used as reinforcement material of the structural layers of the vessel.

It is allowed to use reinforcing fibers of other types with the equivalent characteristics.

Type C fiberglass in accordance with ISO 2078 may be used for the inner surface of the liner. Thermoplastic veils can be used in the manufacture of the liner only it is confirmed that they are compatible with the goods to be transported;

.3 non-plasticized polyvinyl chloride (PVC-N), polypropylene (PP), polyvinylidene fluoride (PVDF), polytetrafluoroethylene (PTFE) may be used aor the manufacture of a thermoplastic liner;

.4 additives required for resin processing, such as catalysts, accelerators, hardeners and thixotropic substances, as well as materials used to improve vessel properties, such as fillers, dyes, pigments, etc., shall not cause a decrease in the strength of the vessel material taking into account the service life and operating temperatures for which this type of the tank container construction with a FRP shell is designed.

2.2.7 The FRP shell, its fasteners, as well as service equipment shall be designed to withstand the loads specified in 2.2.8, 2.2.9, 2.2.12, 2.2.18 and 3.3.2 without loss of content (without taking into account the gas phase of the cargo coming through gas outlets) during the design service life.

2.2.8 When loaded up to the maximum permissible gross mass R, a tank with a FRP shell, its supports and fasteners shall withstand the following separately acting statically applied forces:

.1 in the moving direction: doubled gross mass R multiplied by the acceleration of gravity g $(2Rg)$.

In design of tank containers for dangerous goods, strength of the tank, supports and attachments shall be additionally tested by the static forces in the longitudinal direction equal to $4Rg$;

.2 horizontally at a right angle to the moving direction: gross mass R multiplied by the acceleration of gravity g (Rg). If the direction of movement is not exactly determined, then the loads shall be taken equal to $2Rg$;

.3 vertically upwards: gross mass R multiplied by the acceleration of gravity g (Rg);

.4 vertically downwards: doubled gross mass R multiplied by the acceleration of gravity g $(2Rg)$.

Allowable loads of container components manufactured from metal materials shall be defined in accordance with 2.2.4, Part IV "Tank Containers".

2.2.9 For internal design pressure, external design pressure, statically applied loads specified in 2.2.8 and static gravity caused by the contents with the maximum density specified for this type of the tank container construction with a FRP shell, with the maximum degree of filling in each structural vessel layer shall meet the strength criterion expressed by the ratio:

$$F_1\sigma_{11} + F_2\sigma_{22} + F_1\sigma_{11}^2 + F_{22}\sigma_{22}^2 + F_{33}\sigma_{12}^2 + 2F_{12}\sigma_{11}\sigma_{22} < 1 \qquad (2.2.9\text{-}1)$$

where

$$F_1 = 1/\sigma_1^+ + 1/\sigma_1^-; F_2 = 1/\sigma_2^+ + 1/\sigma_2^-; F_{11} = 1/(\sigma_1^+\sigma_1^-), \qquad (2.2.9\text{-}2)$$

$$F_{22} = 1/(\sigma_2^+\sigma_2^-); F_{33} = 1/\bar{\sigma}_{12}^2; F_{12} = -1/2\sqrt{F_{11}F_{22}}, \qquad (2.2.9\text{-}3)$$

$$\sigma_1^+ = \sigma_{1\text{v}}^+/K; \sigma_1^- = \sigma_{1\text{v}}^-/K; \sigma_2^+ = \sigma_{2\text{v}}^+)/K, \qquad (2.2.9\text{-}4)$$

$$\sigma_2^- = \sigma_{2\text{v}}^-/K; \bar{\sigma}_{12}^2 = \sigma_{12\text{v}}/K, \qquad (2.2.9\text{-}5)$$

K – safety factor;
σ_{11}– stress applied along the fibers of a unidirectional FRP layer;
σ_{22}– stress applied across the fibers of a unidirectional FRP layer;
σ_{12}– effective shear stress of a unidirectional FRP layer;
$\sigma_{1\text{v}}^+$– ultimate tensile strength of a lamina along the fibers determined as per ISO 527-5;
$\sigma_{1\text{v}}^-$– ultimate compressive strength of a lamina along the fibers determined as per ISO 14126;
$\sigma_{2\text{v}}^+$– ultimate tensile strength of a lamina across the fibers determined as per ISO 527-5;
$\sigma_{2\text{v}}^-$– ultimate compressive strength of a lamina across the fibers determined as per ISO 14126;
$\sigma_{12\text{v}}$– ultimate in-plane shear strength determined as per ISO 14129

Tests to determine the design characteristics of the FRP σ_1^+, σ_1^-, σ_2^+, σ_2^-, $\bar{\sigma}_{12}^2$ shall be carried out in accordance with the requirements of the specified ISO standards in at least six coupon samples characteristic of this type of vessel design and manufacturing technology.

The mass content of fibers in the test coupons shall be from 90 % to 100 % of the minimum mass content of fibers in the structural layers specified in the process specification for shell manufacture.

The calculation of the effective stress σ_{11},σ_{22} and σ_{12}in each structural layer of the FRP shell shall be carried out using the finite element method.

In justified cases, to confirm the strength of the FRP shell structure, it is allowed to use other ratios for the strength criterion as agreed with the Register.

The safety factor is calculated by the formula

$$K = K_0 \times K_1 \times K_2 \times K_3 \times K_4 \qquad (2.2.9\text{-}6)$$

where K_0 – strength factor. For general design tanks, the valueK_0shall be at least 1,5. For tanks intended for the transportation of substances requiring a high degree of strength, the value K_0 shall be multiplied by a factor of 2, if the shell is not provided with protection against damage, consisting of a full metal frame, including longitudinal and transverse structural elements;

K_1 – factor of deterioration of material properties due to creep or aging and as a result of the chemical effect of the substances transported. This ratio is calculated by the formula

$$K_1 = 1/\alpha\beta \qquad (2.2.9\text{-}7)$$

where α – creep factor;

β – ageing factor determined as per EN 978 after the test carried out in accordance with EN 977.
Alternatively, it is permitted to use a conservative value $K_1 = 2$. To determine the values of α and β factors, the value of the confidence interval shall be assumed 2σ;

K_2 – factor related to the service temperature and thermal properties of the resin, determined according to the following equation with a minimum value of 1:

$$K_2 = 1{,}25 - 0{,}0125(\mathrm{HDT} - 70), \qquad (2.2.9\text{-}8)$$

where HDT is a heat distortion temperature of the resin, °C;

K_3 – fatigue ratio of material; the value K_3 = 1,75 shall be used, unless a different value is approved by the competent authority. Under the action of loads specified in 2.2.8 (except for $4Rg$ in the longitudinal direction), a value of K_3 equal to 1,1 is applied;

K_4 – curing factor with the following values:

1,1 – if curing is performed in accordance with the approved process;

1,5 – in other cases.

The minimum value of the safety factor K at the loads specified in 2.2.8 and 2.2.12 shall be at least 4.

2.2.10 At any of the loads specified in 2.2.8 and 2.2.9, the elongation of the FRP shell shall not exceed the lesser of the following values in any direction: 0,2 % or 0,1 of the elongation of the resin at fracture determined in compliance with ISO 527-1.

2.2.11 Under the test loads specified in Section 3 (static, dynamic and hydraulic tests), the maximum deformation of the shell in any direction shall not exceed the value of resin elongation at fracture.

2.2.12 For external design pressure, the minimum safety factor for buckling of the shell shall be at least 5.

2.2.13 The minimum thickness of the shell wall and heads shall be confirmed based on calibration calculations of the FRP shell strength, taking into account the strength requirements specified in 2.2.9, but in any case the minimum thickness of the structural layer shall not be less than 6 mm.

2.2.14 A FRP shell shall withstand a drop ball impact test in accordance with the requirements of 3.3.3.

2.2.15 The joints of the structural layers of the FRP shell including the connecting joints of the end heads and the cylindrical part of the vessel, as well as the connecting joints of the extinguishing bulkheads and partitions with the vessel shall withstand the loads indicated in 2.2.8, 2.2.9, 2.2.12 and 3.3.2. In order to avoid stress concentration in the area of joints, joints tapering shall be at least 1:6. The shear strength at the points of the specified joints shall be at least

$$\tau = Q/l \leq \tau_R/K \qquad (2.2.15)$$

where τ_R – joint bending shear strength in compliance with EN ISO 14125. If no measured values are available, τ_R= 10 N/mm²;

Q – value of load per unit width of the joint under static and dynamic loads;

K – safety factor determined in accordance with 2.2.9;

l – the length of the overlap layers in the joint.

Other methods of calculating the joints areas of structural layers are allowed, considering the specific features of vessel design agreed with the Register.

2.2.16 The openings in the shell shall be reinforced so that at least the same safety factors are ensured when exposed to the loads specified in 2.2.8, 2.2.9, 2.2.12, 3.3.2.2 and 3.3.2.3, as well as the for the FRP shell itself. A number of openings in the vessel shall be minimal. The axis ratio of the oval-shaped openings shall not exceed 2.

2.2.17 When designing flanges and piping attached to the shell, the loads arising during handling operations and tightening of bolts shall also be taken into account.

2.2.18 Strength calculations of a tank-container with a FRP shell in addition to the loads specified in 2.2.8, 2.2.9, 2.2.12, 3.3.2.2 and 3.3.2.3 are carried out for static test loads specified in Section 3 of Part II "General Freight Containers" and in 3.4 and 3.5 of Part IV "Tank Containers" (if there is a framework and/ or contact pads).

2.2.19 Verification strength calculations of a tank container with a FRP shell are carried out using finite element method simulating the shell layups, joints of shell layers to each other, joints of the shell to the container frame, areas of manholes, shut off valves and safety devices.

2.2.20 The strength of bolted and bonded-and-bolted joints for installation of flanges of hatches and valves, and attachment points at the frame shall be confirmed during tests of the tank container prototype carried out in compliance with 3.3.2.

2.2.21 The outer surface of the vessel shall have a flame protection coating. The flame retardant layer shall ensure the protection of the shell against flame in compliance with the test requirements specified in 3.3.4.

2.2.22 Tanks with a FRP shell used for the transportation of flammable liquids of hazard class 3 with a flashpoint below 60 °C shall be designed to ensure the removal of static electricity from various components of the tank in order to avoid accumulation of dangerous electrostatic charges.

2.2.22.1 Measured surface resistance on the inner and outer surfaces of the shell shall not exceed 10^9 Ohm. This may be achieved with additives to the resin or by installation of interlayer electrically conductive metal or carbon grids.

2.2.22.2 Measured discharge-to-earth resistance shall not exceed 10^7 Ohms.

2.2.22.3 All elements of the shell shall have electrical contact with each other, with the metal parts of the service and structural equipment of the tanks and with the vehicle. The resistance between the contacting elements and the equipment shall not exceed 10 Ohms.

2.2.23 Tanks or tank compartments without vacuum relief valves shall be so constructed as to withstand an external pressure exceeding the internal pressure by at least 0,04 MPa; at the same time, the tank shall not have residual deformations or malfunctions, which may render the tank container unfit for the designed purpose.

2.2.24 Ullage volume of a tank for liquids is to be determined depending on the kind of cargo transported; it shall, however, be minimum 2,5 % of total capacity at the ambient temperature of 50 °C. In no case shall the tank be completely filled at the ambient temperature of 55 °C.

2.2.25 Tanks intended for the transportation of liquids with kinematic viscosity not exceeding 2680 mm²/s at a temperature of 20 °C shall be subdivided by baffle plates into sections with maximal capacity not exceeding 7500 liters if the tank is filled to more than 20 %, but less than to 80 % of its total capacity.

2.2.26 Tanks designed for the transportation of specific dangerous goods shall have no openings located below the cargo level.

2.3 ARRANGEMENT OF SERVICE EQUIPMENT

2.3.1 Requirements for service equipment are specified in 2.3. Part IV "Tank Containers".

3 TESTING

3.1 GENERAL

3.1.1 When testing the tanks-containers with FRP shell, in addition to the requirements specified in this section, the requirements of Section 3 of Part IV "Tank Containers" (except for 3.7.7 and 3.8) shall be met. The requirements of this Section apply to tank containers with FRP shell of all sizes, regardless of design, materials and components used.

3.2 TESTING MATERIALS AND COMPONENTS

3.2.1 Resins. Tensile elongation of resin is determined in accordance with ISO 527-2, heat distortion temperature is in compliance with ISO 75-1.

3.2.2 Reference samples. Prior to testing, all coatings are removed from the samples. If representative samples cannot be cut from the shell, witness samples may be used. During the test, the following parameters shall be determined:

.1 thickness of the structural layers of the shell wall and heads;

.2 mass content of fiberglass in compliance with ISO 1172, the orientation and arrangement of the reinforcing layers;

.3 tensile strength, elongation at fracture and modulus of elasticity in accordance with ISO 527-4 or ISO 527-5 standards for samples cut in circumferential and longitudinal directions;

.4 bending strength and deflection are determined by the creep test in compliance with ISO 14125 for 1000 hours in a sample of not less than 50 mm wide with a distance between the supports not less than 20 thicknesses of the structural shell of the vessel.

In addition, in accordance with EN 978 standard, α – creep factor and β – ageing factor are determined during this test.

.5 shear strength of interlayer joints (if any) is measured during testing of samples in accordance with ISO 14130.

3.2.3 The creep factor α and the ageing factor β are determined on samples cut from the vessel in accordance with the standards EN 978 and EN 977 for the subsequent calculation of the material deterioration factor K_1due to creep or ageing (2.2.9).

3.2.4 The chemical compatibility of a FRP shell with the transported substances shall be demonstrated by one of the following methods. This demonstration shall account for all aspects of the compatibility of shell materials and equipment installed on it with the transported substances, including chemical degradation of the shell materials, the onset of critical reactions in the transported substance and hazardous reactions between both.

3.2.4.1 Representative samples including those being a part of the liner (with welded joints if the liner is manufactured from thermoplastic FRP) are subjected to the chemical resistance test for 1000 hours at 50 °C in compliance with ISO 175. It is permitted to reduce the elastic modulus measured during the bending test in compliance with EN 978 by no more than 25 % in relation to the characteristics of the virgin samples. Cracks, bubbles, pitting corrosion, separation in structural layers, liner peeling and roughness are not permitted.

3.2.4.2 Other methods to conform chemical compatibility after their justification are permitted.

3.3 TESTS OF TANK CONTAINERS

3.3.1 During the following tests, it is permitted to replace the regular service equipment of the tank with other equipment to ensure that the tests are carried out.

3.3.2 A tank container with strain sensors installed in areas that require comparison of the results of FEM design calculation with test results shall be subjected to the following loads with strains recorded:

.1 a tank container filled with water up to the maximum degree of filling;

.2 a tank container filled with water up to 97 % of the total capacity subjected to dynamic longitudinal impact tests in accordance with the requirements of 3.6, Part IV "Tank Containers". The measured FRP shell deformations shall be compared with the design parameters;

.3 a tank container filled with water subjected to internal test pressure in accordance with the requirements of 3.7 (except 3.7.7), Part IV "Tanks Containers. Under such load, the vessel shall have no visible damage or leakage of its contents.

3.3.3 The tank shall be subjected to ball drop testing in compliance with EN 976-1. No visible damage is permitted inside or outside the tank.

3.3.4 A prototype tank container with its service and structural equipment in place, filled with water up to 80 % of its maximum capacity, shall be subjected to full engulfment in flame for 30 min using an open reservoir filled with fuel oil or any other type of fuel with the same fire effect. The reservoir dimensions shall exceed those of the tank by at least 50 cm for each side, and the distance between the fuel level and the tank vessel shall be 50 to 80 cm. The rest of the tank below the liquid level, including openings and closures, shall remain leakproof, except for drips.

3.4 INSPECTIONS

3.4.1 Before being put into service, the tank container and its equipment shall be inspected in compliance with the requirements of 3.11, Part IV "Tank Containers".

4 MARKING

4.1 MANDATORY MARKING

4.1.1 Tank containers with a FRP shell shall be marked in accordance with the requirements specified in Section 4, Part I "Basic Requirements" and Section 4, Part IV "Tank Containers".

4.1.2 Requirements of 4.3, Part IV "Tank Containers" are applicable to FRP tank data identification plate with the following modifications:

4.3.1.3.1 is not applicable (the "U/N" sign shall be removed);

in 4.3.1.3.2 to specify the Tank Code in accordance with the applicable Rules, Conventions and Agreements;

4.3.1.4.5 and 4.3.1.6.3 are not applicable;

in 4.3.1.6.1, the material grade(s) (FRP) of the vessel shell and heads and Technical Specifications of Material (FRP) number shall be specified;

in the Notes, points 2 – 4 are not applicable.

4.1.3 Upon agreement with the customer, a metal plate with description of the permissible operational damage to a FRP shell may be additionally installed.

RULES FOR THE APPROVAL OF CONTAINERS FOR THE TRANSPORT OF GOODS UNDER CUSTOMS SEAL

1 GENERAL

1.1 APPLICATION

1.1.1 These Rules apply to containers with maximum gross mass of 10 t and more, intended for international transport of goods.

1.2 DEFINITIONS AND EXPLANATIONS

1.2.1 For the purpose of these Rules the following definition has been adopted.

C o n t a i n e r is an article of transport equipment:

fully or partially enclosed to constitute compartment intended for containing goods;

of a permanent character and accordingly strong enough to be suitable for repeated use;

specially designed to facilitate the carriage of goods by one or more modes of transport, without intermediate reloading.

N o t e s : 1. The term "container" shall include accessories and equipment appropriate for the type concerned, provided that such accessories and equipment are carried with the container.

2. The term "container" shall not include vehicles, accessories or spare parts of vehicles, as well as packaging.

1.3 APPROVAL PROCEDURES

1.3.1 General.

1.3.1.1 The containers may be approved for the transport of goods under Customs seal:

.1 at the manufacturing stage, by design type (approval at the manufacturing stage);

.2 at any stage subsequent to manufacture, either individually or by batches of the same container type (approval at any stage subsequent to manufacture).

1.3.1.2 If a container no longer complies with the technical conditions prescribed for its approval, before it can be used for the transport of goods under Customs seal it shall be restored to the condition which has justified its approval so as to comply again with the said technical conditions.

1.3.1.3 If the essential characteristics of a container are changed, the container shall cease to be covered by the approval and shall be reapproved before it can be used for the transport of goods under Customs seal.

1.3.2 Procedure for approval at the manufacturing stage.

1.3.2.1 Where the approval of containers for the transport of goods under Customs seal is desired at the manufacturing stage, the manufacturer shall submit to the Register an application in writing for approval by design type.

1.3.2.2 The manufacturer shall state in his application the identification numbers and letters which he assigns to the design type of container covered by the application. The application shall be also accompanied by technical documentation (refer to 1.3.2.3) submitted for the approval and by an assurance in writing (refer to 1.3.2.5).

1.3.2.3 The technical documentation for approval of container by design type shall at least include:

.1 design specification of the container stating its construction, characteristics of materials involved, welding procedures, as well as the methods of assembling;

.2 general arrangement plans, sectional views with scantlings, assemblies and elements, with indication of places for affixing Customs seals;

.3 views of door locking devices with indication of materials involved, as well as places and methods of affixing Customs seals;

.4 sketches of the container sheet, if used, with indication of fastening methods and places for affixing Customs seals.

Any other additional documentation may be required by the Register, if considered necessary.

1.3.2.4 If necessary, the Register may require that certain changes be introduced into the container design type submitted for the approval.

1.3.2.5 The manufacturer shall assure in writing that he will:

.1 submit to the Register such containers of approved design type as he may wish to examine;

.2 permit the Register to examine further containers at any time during series production to the approved design type;

.3 advise the Register of any change, of whatever magnitude, in drawings or specifications, before proceeding with such change;

.4 affix to the container the CCC Plate with indication of all the required markings thereon (refer to 3.1);

.5 keep record of containers manufactured to the approved design type.

1.3.2.6 One or more containers, manufactured according to approved technical documentation, shall be submitted to the Register for survey.

1.3.2.7 If satisfied with the results of survey, the Register issues to the manufacturer a Certificate of Approval stating that the container design type concerned complies with technical conditions set out in Section 2.

The Certificate of Approval shall be issued as a single copy and is valid for all containers manufactured in conformity with technical documentation approved by the Register for the design type concerned.

The Certificate of Approval shall entitle the manufacturer to affix to every container manufactured to the approved design type, the CCC Plate.

1.3.3 Procedure for approval at a stage subsequent to manufacture.

1.3.3.1 If approval of containers for the transport of goods under Customs seal is desired at any stage subsequent to manufacture, the owner of containers shall submit an application in writing to the Register.

The application shall state the manufacturer's number placed on each container.

The containers mentioned in the application shall be produced to the Register for survey individually or by batches of the same design type.

1.3.3.2 If satisfied with the results of survey, the Register issues to the owner a Certificate of Approval stating that containers comply with technical conditions set out in Section 2.

The Certificate of Approval shall be issued as a single copy, and shall entitle the owner to affix to every container, approved according to this procedure, the CCC Plate.

2 TECHNICAL REQUIREMENTS

2.1 GENERAL

2.1.1 Approval for the international transport of goods under Customs seal may be only granted to containers constructed and equipped in such a manner that:

.1 no goods can be removed from, or introduced into, the sealed part of container without leaving visible traces of tampering or without breaking the Customs seal;

.2 Customs seal can be simply and efectively affixed to them;

.3 they contain no concealed spaces where goods may be hidden;

.4 all spaces capable of holding goods are readily accessible for Customs inspection.

2.2 STRUCTURE OF CONTAINERS

2.2.1 The constituent parts of a container (sides, floor, doors, roof, uprights, frames, cross-pieces, etc.) shall be assembled either by means of devices which cannot be removed and replaced from the outside without leaving visible traces or by such methods as will produce a structure which cannot be modified without leaving visible traces.

When the sides, floor, doors and roof are made of various materials, these shall meet the outlined requirements and be of sufficient strength. Where joining devices (rivets, screws, bolts, nuts, etc.) are used, a sufficient number of such devices shall be inserted from outside, traverse the assembled constituent parts, protrude inside and there be firmly secured (e.g. riveted, welded, bushed, bolted, and riveted or welded on the nut). However, conventional rivets (i.e. rivets which placing requires handling from both sides of the assembly) may also be inserted from inside. Notwithstanding the above, container floors may be secured by means of self-tapping screws or self-drilling rivets or rivets inserted by means of an explosive charge or pins inserted pneumatically, when placed from inside and passing at right angles through the floor and metallic cross-pieces underneath, on condition, except in case of self-tapping screws, that their ends be flush with the level of the outside part of the cross-piece or be welded on to it.

The Register shall determine that the joining devices meet the above requirements and shall make sure that the constituent parts so assembled cannot be removed or replaced without leaving visible traces.

Joining devices which can be removed or replaced from one side without leaving visible traces, i.e. without requiring handling from both sides of the constituent parts to be assembled (e.g. expansion rivets, blind rivets and the like), shall not be allowed.

Where, due to technical reasons, it is not practicable to secure the constituent parts in the manner described above, they may be joined by means of devices which placing can be effected only from one side, provided that the joining devices used on the inner face of the wall are not accessible from outside.

2.2.2 Doors and other closing systems, including stopcocks, manhole-covers, flanges, etc. shall be fitted with a device on which Customs seals can be fixed. This device shall be such that it cannot be removed and replaced from outside the container without leaving visible traces, or the door or fastening be opened without breaking the Customs seals.

The Customs seals shall be adequately protected.

Containers having a large number of such closures, as valves, stopcocks, manhole covers, flanges etc. shall be so constructed as to reduce the number of Customs seals to a minimum. To this end, neighbouring closures shall be joined together by a common device requiring only one Customs seal, or shall be provided with a cover meeting the same purpose.

2.2.3 Containers with opening roofs shall be so constructed as to permit sealing with a minimum number of Customs seals.

2.2.4 Butt-hinges, strap hinges, hinge-pins and other details for hanging doors and the like shall be secured by welding or riveting, by means of bushes, bolts, by riveting or welding on the nuts. Moreover, the various components of such devices (e.g. hingle-plates, pins or swivels) shall be so fitted that they cannot be removed or dismantled when the container is closed and sealed without leaving visible traces.

Where a door or closing device has more than two hinges, only those two hinges nearest to the extremities of the door need be fixed in conformity with requirements of this paragraph.

Exceptionally, in the case of thermal containers only, the Customs sealing device, the hinges and any fittings the removal of which would give access to the interior of the container or to spaces in which goods could be concealed, may be fixed to the doors of such containers by means of set bolts or set screws which are inserted from outside but which do not otherwise meet the requirements of 2.2.1, on condition that:

the tails of the set bolts or set screws are fixed to a tapping plate or similar device fitted behind the outer layer (layers) of the door structure;

the heads of an appropriate number of set bolts or set screws are so welded to the Customs sealing device, hinges, etc., that they are completely deformed and that the set bolts or set screws cannot be removed without leaving visible traces (refer to Fig. 2.2.4).

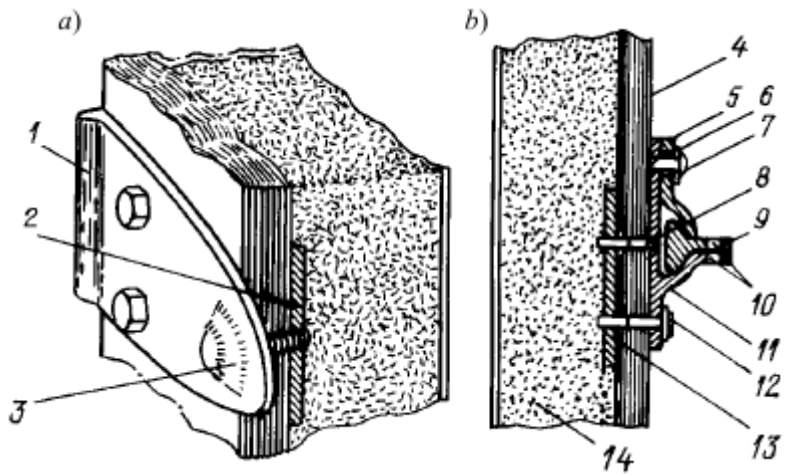

Fig. 2.2.4
Example of hinge (a) and Customs sealing device (b) on doors of thermal containers

1 – hinge blade; 2 – tapped metal plate; 3 – head of set bolt or screw fully welded and completely deformed; 4 – door; 5 – pivoting section; 6 – pivot bush; 7 – pivot; 8 – set screw head completely deformed by welding, not accessible when door sealed; 9 – lever; 10 – holes for Customs seals; 11 – back plate; 12 – head of set bolt or set screw completely deformed by welding; 13 – tapped metal plate; 14 – insulating material

2.2.5 The Customs sealing devices (refer to Figs. 2.2.5-1 and 2.2.5-2) shall:

.1 incorporate holes of not less than 11 mm in diameter or slots of at least 11 mm in length and 3 mm in width;

.2 be so designed that, once the container has been closed and sealed, the device cannot be removed without leaving visible traces;

.3 be secured by welding.

The Customs sealing devices shown in Fig. 2.2.5-2 may also be fixed to doors of thermal containers. Such devices may be secured by means of at least two set bolts or set screws fixed into a metal tapped plate inserted behind the outer layer of the door. In such cases the heads of set bolts or set screws shall be so welded that they are completely deformed.

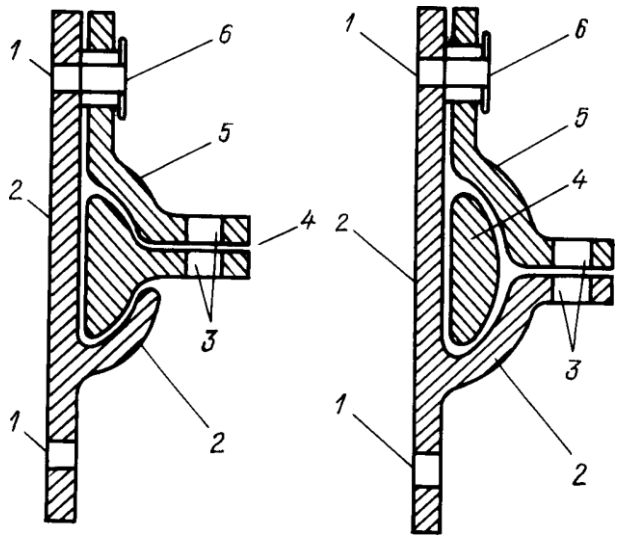

Fig. 2.2.5-1
Customs sealing device

1 – hole for rivet, screw, bolt, etc. (to be secured from inside of the door); 2 – back plate; 3 – hole for Customs seal; 4 – lever; 5 – pivot section; 6 – rivet, screw, bolt, etc. affixing pivot section

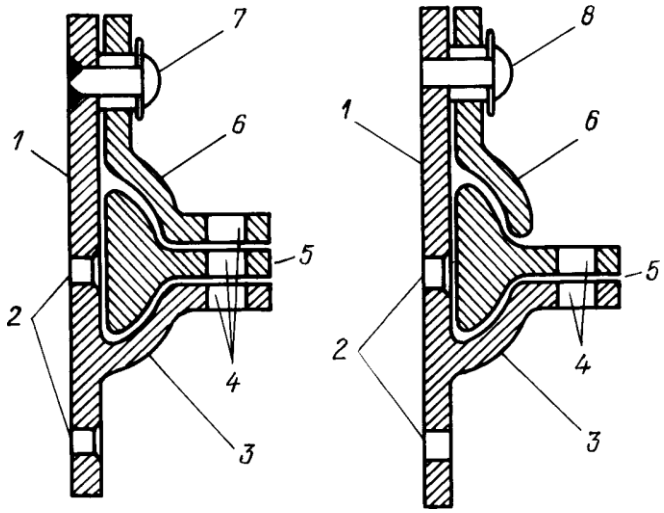

Fig. 2.2.5-2
Customs sealing device

1 – back plate; 2 – hole for rivet, screw, bolt, etc. (to be secured from the inside of the door); 3 – lever retainer; 4 – hole for Customs seal; 5 – lever; 6 – pivoting section; 7 – rivet welded to back plate; 8 – rivet, screw, bolt, etc. affixing pivoting section

2.2.6 Ventilation and drainage apertures shall be provided with a device preventing access to the interior of the container. This device shall be such that it cannot be removed or replaced from outside without leaving visible traces. The maximum dimension of vent apertures shall not exceed 400 mm and that of drainage apertures shall not exceed 35 mm.

Ventilation and drainage apertures permitting access to the goods, shall be obstructed by means of wire gauze or perforated metal screen with maximum hole dimension 3 mm in both

cases and shall be protected by a welded metal lattice work with maximum hole dimension 10 mm.

The ventilation apertures not permitting direct access to the goods (e.g. because of elbow or baffleplate systems) shall be provided with devices outlined in the foregoing paragraph, the hole dimensions being, however, as much as 10 and 20 mm respectively.

For the drainage apertures, which do not permit direct access to the goods, the devices, mentioned in the foregoing paragraph, may be omitted, on condition that the apertures are provided with a reliable baffle system readily accessible for inspection from inside of the container.

If vent openings are made in sheets, the above mentioned blocking devices shall be provided. However, blocking devices in the form of a perforated metal screen, fitted outside, and wire or other gauze, fitted inside, are admissible.

Identical non-metal devices may be allowed provided that the holes are of requisite dimensions and the material used is strong enough to prevent the holes from being substantially enlarged without visible damage. In addition, it shall be impossible to replace the said devices by working from one side of the sheet only.

2.2.7 Notwithstanding the requirement of 2.1.1.3, constituent part of the container which, for practical reasons, have to include empty spaces (for example, between the partitions of a double wall) shall be permitted. In order that the said spaces cannot be used to conceal goods, the lining inside the container shall be so fitted that it cannot be removed and replaced without leaving obvious traces; or the number of the said spaces shall be kept to a minimum and these spaces shall be readily accessible for Customs inspection.

2.3 CONTAINERS CAPABLE OF BEING FOLDED OR DISMANTLED

2.3.1 The containers capable of being folded or dismantled shall comply with requirements stated in 2.1 and 2.2.

In addition, such containers shall be fitted with fasteners which lock the various parts together once the container has been erected. Fasteners shall be so designed as to enable sealing by Customs seals, if it is fitted on the outside of the container after assembly.

2.4 SHEETED CONTAINERS

2.4.1 Containers fitted with sheets shall comply with requirements stated in 2.1, 2.2 and 2.3 in so far as these requirements are applicable to such containers. The sheets of such containers shall comply with the requirements of 2.4.2 to 2.4.11.

2.4.2 The sheet shall be either of strong canvas or of plastic-covered or rubberized cloth, which shall be of sufficient strength and unstretchable. It shall be in good condition and made up in such a way that once the closing device has been secured, it is impossible to gain access to the load compartment without leaving obvious traces.

2.4.3 If the sheet is made up of several pieces, their edges shall be folded into one another and sewn together with two seams at least 15 mm apart (refer to Fig. 2.4.3-1). However, if for certain parts of the sheet (such as flaps at the rear or at reinforced corners) it is not possible to assemble the pieces in that way, it will be sufficient to fold the edge of the top portion and make the seams so as shown in Figs. 2.4.3-2 and 2.4.3-3. One of the seams shall be visible only from the inside and the colour of the thread used for that seam shall be clearly different from the colour of the sheet itself and from the colour of the thread used for the other seam. All seams shall be machine-sewn.

The cloth of which pieces of the sheet are made shall meet the requirements of 2.4.2.

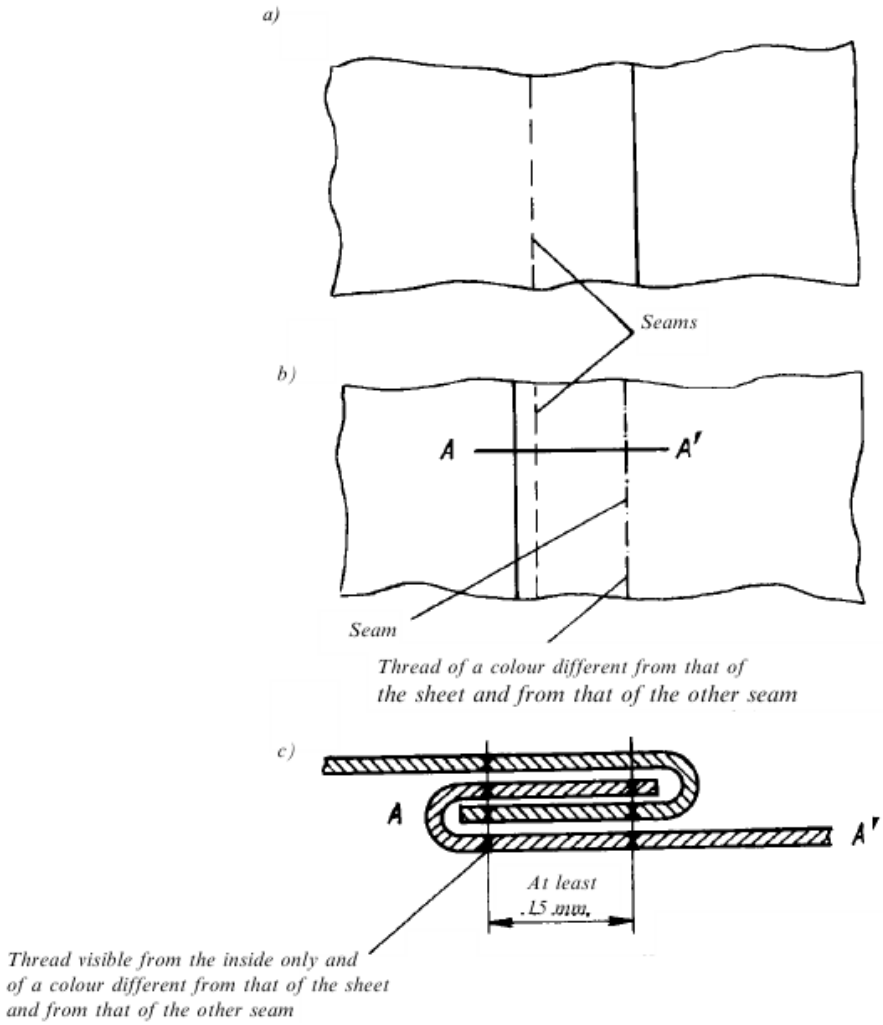

Fig. 2.4.3-1
Sheet made of several pieces of cloth sewn together by means of seams:

a – outside view; *b* – inside view; *c* – section A-A' (double flat seam)

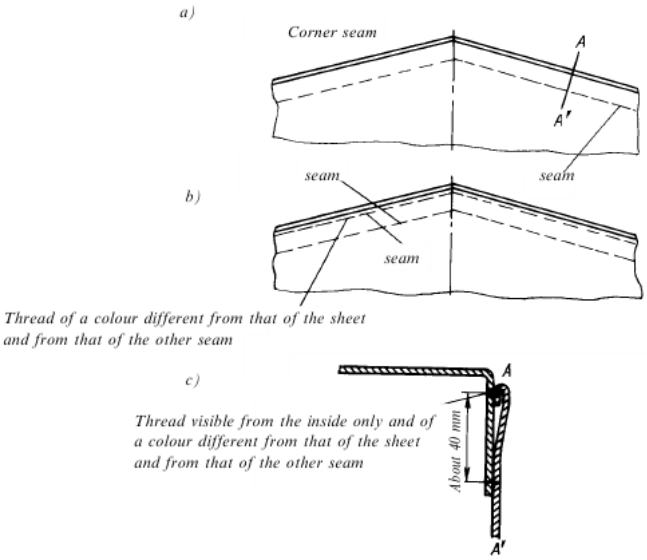

Fig. 2.4.3-2
Sheet made of several pieces of cloth:

a – outside view; *b* – inside view; *c* – section A-A'

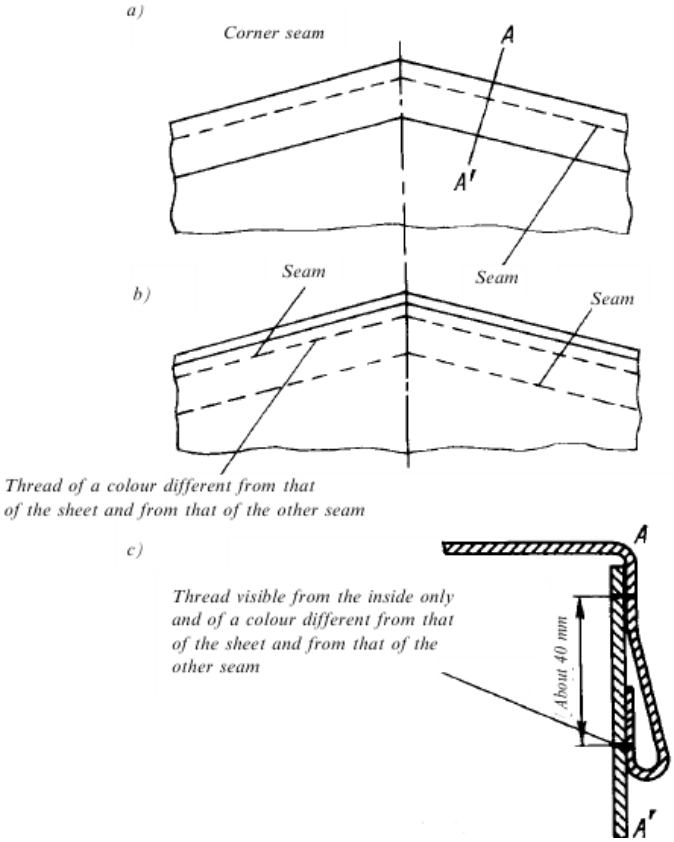

Fig. 2.4.3-3
Sheet made of several pieces of cloth:

a – outside view; *b* – inside view; *c* – section A-A'

2.4.4 If the sheet is made up of several pieces of plastic-covered cloth, the pieces shall be alternatively soldered together (refer to Fig. 2.4.4). The edges of the pieces shall overlap by at least 15 mm. The pieces shall be fused together over the whole width of the overlap. The edge of the outer sheet shall be covered with a band of plastic material of at least 7 mm wide, affixed by the same fusing process. The plastic band and a width of at least 3 mm on each side shall have a well-marked uniform relief stamped on it. The pieces shall be bound in such a way that they cannot be separated and rejoined without leaving visible traces.

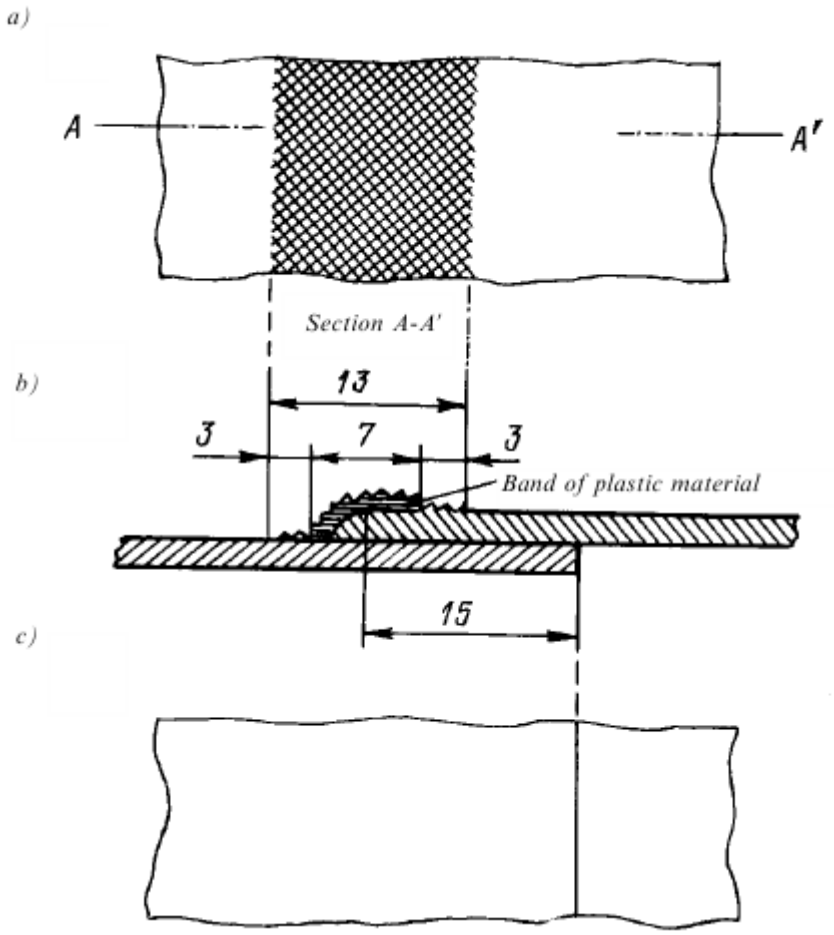

Fig. 2.4.4
Sheet made of several pieces soldered together (dimensions are shown in mm):

a – outside view; *b* – section A-A'; *c* – inside view

2.4.5 Any arrangement of pieces is permitted for making up a sheet, provided the pieces are assembled according to provisions of 2.4.3.

2.4.6 The method for repairing the sheet is shown in Fig. 2.4.6. The edges to be sewn shall be folded into one another and sewn together with two clearly visible seams at least 15 mm apart; the colour of the thread visible from the inside shall be different from that of the thread visible from the outside and from the colour of the sheet itself. All seams shall be machine-sewn.

When a sheet which has been damaged near the edges is repaired by replacing the damaged part by a patch, the seam may also be made according to 2.4.3 and Fig. 2.4.3-1.

Sheets of plastic-covered cloth may alternatively be repaired by the method described in 2.4.4, but in that case the plastic band shall be affixed to both sides of the sheet, while the patch shall be fitted on the inside of the sheet.

2.4.7 The sheet shall be affixed to the container according to provisions set forth in 2.1.1.1 and 2.1.1.2 by means of:

metal rings fixed to the container;

eyelets let into the edge of the sheet;

a rope or a wire passing through the rings above the sheet and visible from the outside for its entire length.

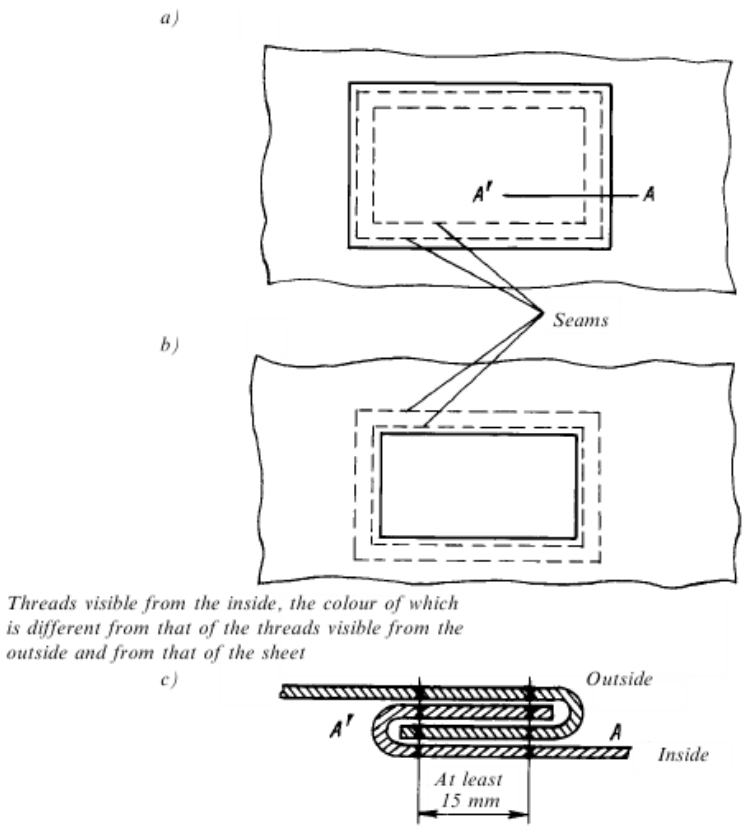

Fig. 2.4.6
Repair of the sheet

a – outside view; *b* – inside view; *c* – section A-A'

Where the edges of the sheet shall be permanently attached to the body of the container, the sheet shall be held in place by one or more strips of metal secured to the body of the container by joining devices meeting the requirements of 2.2.4.

Examples of construction systems of affixing container sheet as well as the sheet around the container corners, acceptable from a Customs point of view, are shown in Figs. 2.4.7-1 and 2.4.7-2.

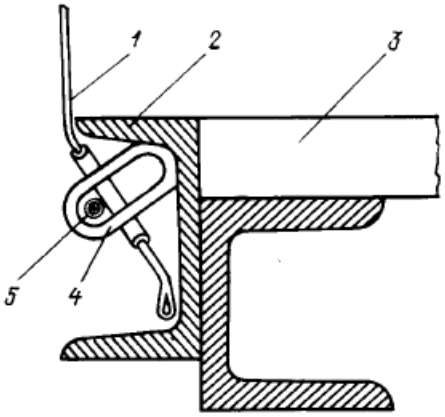

Fig. 2.4.7-1
Device for affixing the container sheet:

1 – sheet; 2 – steel girder; 3 – floor; 4 – securing ring; 5 – sheet-retaining rope

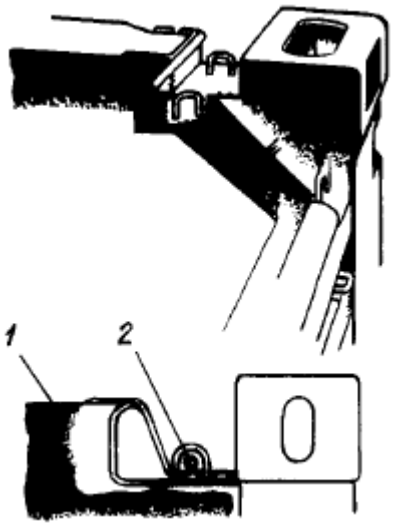

Fig. 2.4.7-2
Device for affixing the sheet around container corners:

1 – sheet on the roof; 2 – sheet-retaining rope

2.4.8 The fastenings of a sheet shall comply with the following requirements:

.1 the spaces between the rings and the spaces between the eyelets shall not exceed 200 mm. The spaces may, however, be greater but shall not exceed 300 mm between rings and eyelets on either side of the upright if the construction of the container and the sheet is such as to prevent all access to the interior of the container. The eyelets shall be reinforced;

.2 the space between the eyelets of the portion of the sheet overlapping the upright (crossmembers of the roof) and the space between the corresponding rings on the container shall not exceed 300 mm, on condition that the rings are recessed in the side boards and the eyelets are oval and so small that they can just pass over the rings;

.3 the steel wire rope shall be at least 3 mm in diameter. The wire rope may be encased in a transparent unstretchable plastic sheath;

.4 a wire rope comprising a textile core surrounded by strands of steel wire shall also be at least 3 mm in diameter (exclusive of the transparent plastic sheath, if any);

.5 the rope shall be of hemp or sisal of at least 8 mm in diameter, encased in a transparent unstretchable plastic sheath;

.6 each cable or rope, whatever the material, shall be in one piece and have metal end-pieces at each end. The fastening arrangement of each metal end-piece shall include a hollow rivet passing through the cable or rope so as to allow the introduction of a thread or strap of the Customs seal. The rope or cable shall remain visible on either side of the hollow rivet so that it is possible to make sure that the rope or cable is in one piece. Fig. 2.4.8.6 shows a specimen of the end-piece;

.7 metal securing rings sliding on metal bars (refer to Fig. 2.4.8.7) are acceptable provided that:

the bars are affixed to the container at maximum spacings of 600 mm in such a manner that they cannot be removed and replaced without leaving obvious traces;

the rings are made with double hoop or equipped with a central bar and made in one piece without the use of welding;

the sheet is fixed to the container in accordance with requirements of 2.1.1.3.

2.4.9 Where the sheet is provided with openings used for loading/unloading, the two edges of the sheet shall adequately overlap and be fastened by:

.1 a flap sewn or soldered in accordance with 2.4.3 or 2.4.4 from the inside of the sheet. A flap may not be required if a special device (e.g. baffle plate, etc.) is fitted which prevents access to the goods. The flap is not required for containers with sliding sheets. Such device is shown in Fig. 2.4.9.1;

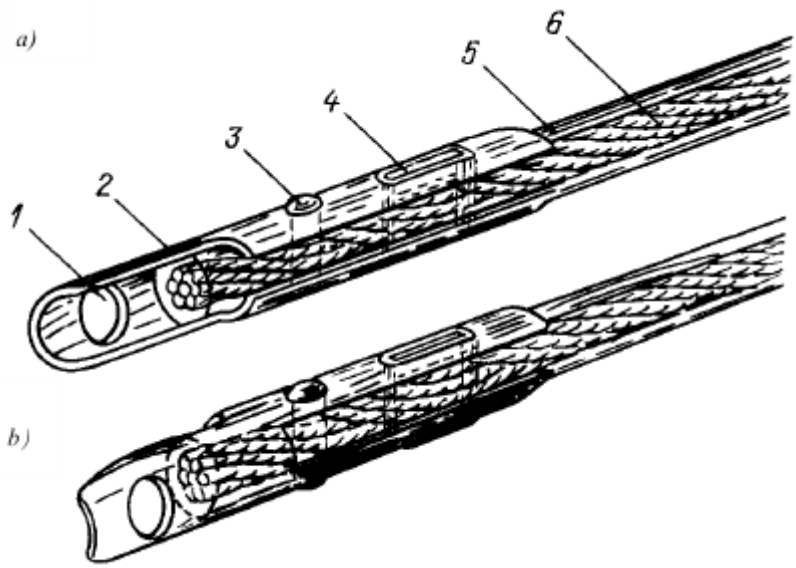

Fig. 2.4.8.6
Specimen of end-piece (side view):

a – front; *b* – back; 1 – hole for closing by carrier; 2 – hard metal end-piece; 3 – solid rivet; 4 – hollow rivet for passing the thread or the strap of the Customs seal (minimum dimensions of the hole: width – 3 mm, length – 11 mm); 5 – transparent plastic sheath; 6 – rope

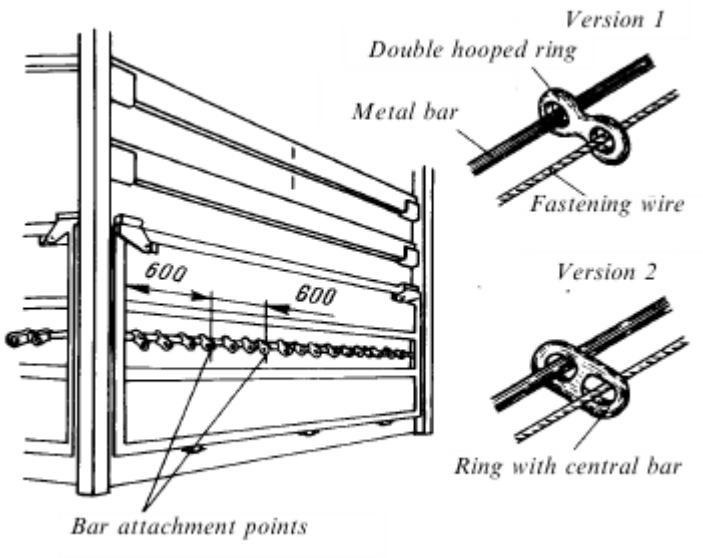

Fig. 2.4.8.7
Sheeted containers with sliding rings

.2 small individual flaps each pierced by one eyelet secured to the outside surface of the sheet and spaced at such distances as will permit an adequate tensioning of the sheet;

.3 rings and eyelets complying with requirements of 2.4.8;

.4 a thong made of appropriate unstretchable material, in one piece, at least 20 mm wide and 3 mm thick, passing through the rings and holding together the two edges of the sheet and the flap. The thong shall be secured inside the sheet and have an eyelet to take the cable or rope mentioned in 2.4.8.

The thongs may be manufactured of leather, unstretchable textile materials, including plastic-covered or rubberized cloth, provided that such materials cannot after severance be welded or reconstituted without leaving visible traces. Furthermore, the plastic material used to cover thongs shall be transparent and smooth-surfaced.

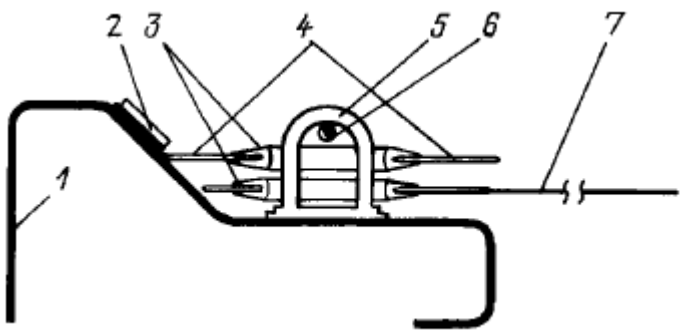

Fig. 2.4.9.1
Device for affixing container sheets:

1 – wall; 2 – metal bar, riveted; 3 – eyelets; 4 – flap; 5 – securing ring; 6 – sheet retaining rope; 7 – sheet

2.4.10 The sheet shall overlap the solid part of the container by at least 250 mm, measured from the centre of securing rings, unless the construction of the container by itself prevents all access to the goods.

2.4.11 In no case shall the sheet conceal the marking of container.

2.5 CONTAINERS WITH SLIDING SHEETS

2.5.1 Containers with sliding sheets shall meet the requirements of 2.1 to 2.4, as far as applicable, and also the requirements of this Chapter.

2.5.2 The sliding sheets, floor, doors and all other constituent parts of the container shall meet either the requirements of 2.4.7 to 2.4.9 or the requirements set forth below.

2.5.2.1 The sliding sheets, floor, doors and all other constituent parts of the container shall be assembled in such away that they cannot be opened or closed without leaving obvious traces.

2.5.2.2 The sheet shall overlap the solid parts at the top of the container by at least ¼ of the actual distance between the tensioning straps. The sheet shall overlap the solid parts at the bottom of the container by at least 50 mm. The horizontal opening between the sheet and the solid parts of the container measured perpendicular to the longitudinal axis of the container shall not exceed 10 mm at any place when the container is secured and sealed for the Customs purposes.

2.5.2.3 The sliding sheet guidance and other movable parts shall be assembled in such a way that closed and the Customs-sealed doors and other movable parts cannot be opened or closed from the outside without leaving obvious traces. The sliding sheet guidance and the other movable parts shall be assembled in such a way that it is impossible to gain access to the container without leaving obvious traces. The like system is shown in Fig. 2.5.2.3.

2.5.2.4 The horizontal distance between the rings, used for the Customs purposes, on the solid parts of the container shall not exceed 200 mm. The space may, however, be greater, but shall not exceed 300 mm between the rings on either side of the upright if the construction of the container and the sheets is such as preventing all access to the container. In any case, the conditions set forth in 2.5.2.2 shall be complied with.

2.5.2.5 The distance between the tensioning straps shall not exceed 600 mm.

2.5.2.6 The fastenings used to secure the sheets to the solid parts of the container shall meet the requirements of 2.4.8.3 to 2.4.8.6.

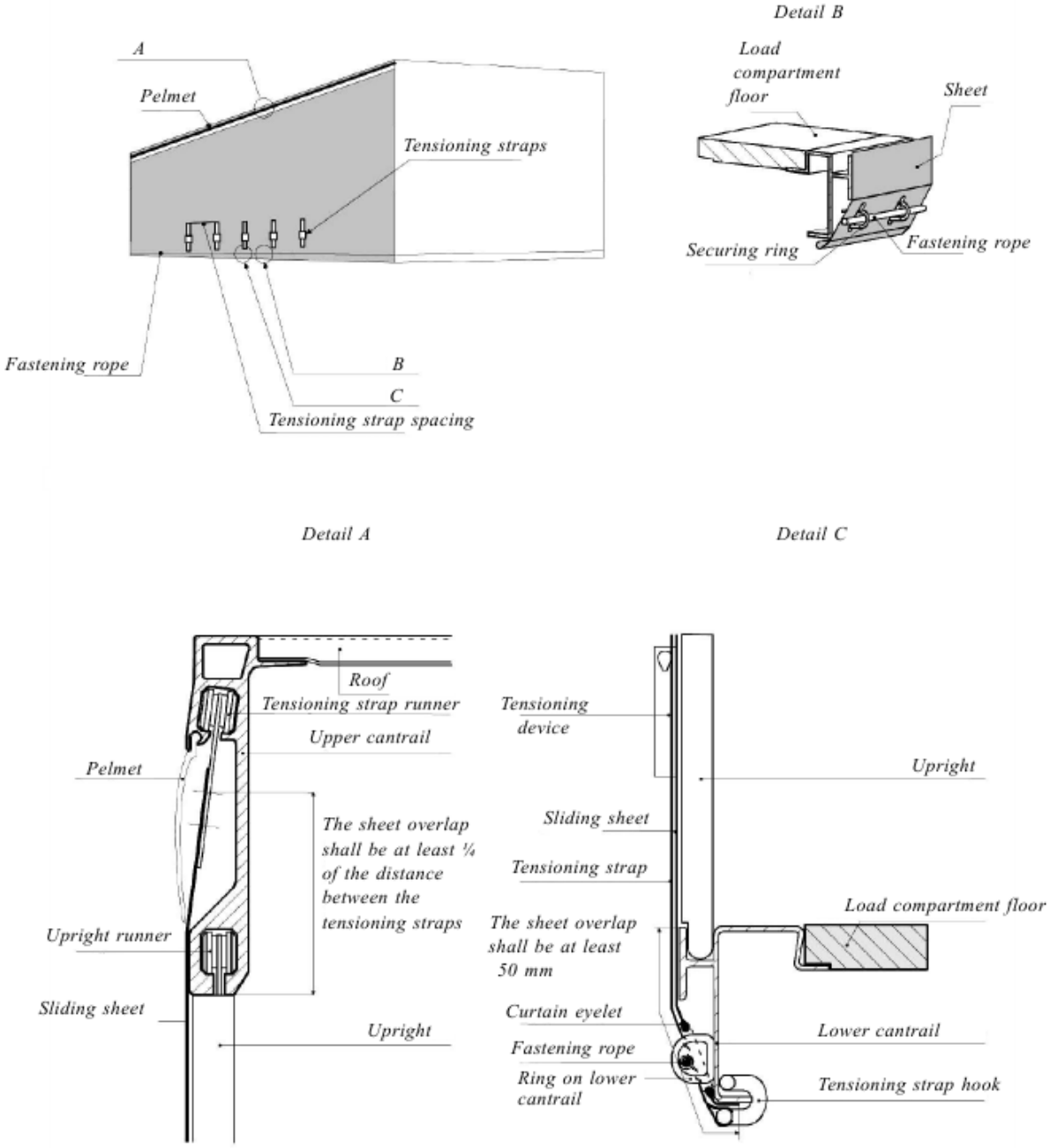

Fig. 2.5.2.3
Container with a sliding sheet

3 MARKING

3.1 THE CCC PLATE

3.1.1 The applicant to whom the Register has issued the Certificate of Approval (refer to 1.3.2.7 and 1.3.3.2) shall affix to every approved container the CCC Plate.

3.1.2 The CCC Plate is a metal plate of rectangular shape measuring not less than 200×100 mm, and bearing the following particulars in the English language (refer to Fig. 3.1.2):

.1 "approved for transport of goods under Customs seal";

.2 type;

.3 manufacturer's No. of the container.

The height of letters for the title of the CCC Plate (refer to 3.1.2.1) shall be minimum 8 mm. The height of all other letters and figures shall be not less than 5 mm.

The title and the particulars on the plate shall be stamped into, embossed on, or indicated on its surface in any other permanent and legible way.

The CCC Plate shall be made of durable, non-corrosive and fire-proof material.

3.1.3 The CCC Plate shall be permanently affixed to the container at a clearly visible place where it cannot be easily damaged or unauthorizedly removed.

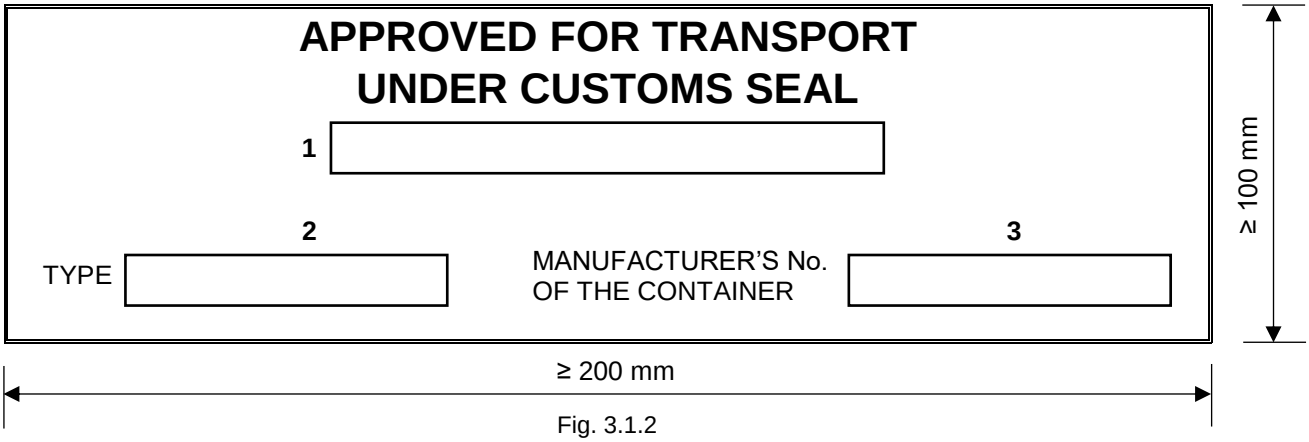

Fig. 3.1.2
The CCC Plate

N o t e s : 1. There shall be indication of the number of the Certificate of Approval issued by the Register.

2. Type means the identification numbers and letters (model of container) assigned to the design type of container by the manufacturer, and is indicated on the CCC Plate only if the container has been approved by design type.

3. There shall be indicated the manufacture number assigned to the container by the manufacturer.

3.2 CONTAINER MARKING

3.2.1 The owner's code, owner's number and check digit of the container, and also the tare weight of the container shall be marked on the latter.

3.2.2 The inscriptions and signs shall be arranged in compliance with 4.2, Part I "Basic Requirements" of the Rules for the Manufacture of Containers.

RULES FOR TECHNICAL SUPERVISION DURING MANUFACTURE OF CONTAINERS, MATERIALS AND PRODUCTS FOR CONTAINERS

1 GENERAL REGULATIONS FOR THE TECHNICAL SUPERVISION

1.1 APPLICATION

1.1.1 The present Rules for Technical Supervision during Manufacture of Containers (hereinafter referred to as these Rules) are applied by the Russian Maritime Register of Shipping (hereinafter referred to as the Register) during technical supervision of the manufacture of containers of various types as well as associated materials and products.

1.1.2 The requirements of the Rules are mandatory for all firms and individuals involved in design, manufacture and testing of containers and/or engaged in the manufacture of materials and products for them. When the technical supervision is performed in other countries the provisions of the Rules may be applied regarding salient features and differences in the in the production processes typical of each particular country.

1.1.3 The Nomenclature of Items of the Register Technical Supervision (hereinafter referred to as the Nomenclature) of containers manufacture is given in Table 2.1.2 of the General Regulations for the Technical Supervision of Containers.

1.1.4 The RS nomenclature during manufacture of materials and products for containers is given in Table 2.1.3 of the General Regulations for the Technical Supervision of Containers.

1.1.5 Matters not covered by the Rules are settled by the Register Head Office (RHO).

1.1.6 Interpretation of provisions herein is within the RHO terms of reference.

1.2 DEFINITIONS, ABBREVIATIONS AND EXPLANATIONS

1.2.1 Definitions, abbreviations and explanations related to the general terminology of the Rules are given in 1.1 of the General Regulations for the Technical Supervision of Containers. The following definitions and explanations have been adopted.

Vacuum infusion means FRP manufacture method by impregnation of dry fillers, preliminarily manually or automatically placed under vacuum bag.

Products mean machinery, appliances, pressure vessels, apparatuses, devices, items of equipment or outfit intended for the containers covered by the requirements of the Rules.

Contact molding means a process of FRP manufacture by means of filler placing in a mold and impregnation. Curing proceeds at room temperature using a catalyst-promoter system or by heating, and no additional pressure is applied.

Laminate means a product made by bonding together two or more layers of material or materials.

Tape means a large number of rovings interconnected by cross-linking. It is applied to filament winding technology.

Materials mean metal, welding, sealing materials, fiber reinforced materials, plastics, wood, plywood, clothes covered by the requirements of the Rules.

Resin transfer molding (RTM method) means FRP manufacture method in airproof molds using overpressure for fiber impregnation.

Type-series (production) sample is a sample of a container batch or product batch manufactured as per the technology adopted by the firm (manufacturer) for mass production, where it is tested for its compliance with the pilot specimen (prototype) according to the technical documentation approved by the Register.

1.2.2 Explanations.

Containers, materials and products for containers are considered as the items of the RS technical supervision in these Rules.

1.3 GENERAL

1.3.1 The purpose of the technical supervision is to determine and to establish compliance of items of technical supervision with the RS requirements.

1.3.2 All technical supervision services are rendered by the Register based on requests and agreements with organizations, firms and individuals involved in manufacture of items of the RS technical supervision (refer to 1.5).

1.3.3 Items of the Register technical supervision are given in Table 2.1.2 and 2.1.3 of the General Regulations for the Technical Supervision of Containers, technical requirements applicable thereto are defined in the Rules for the Manufacture of Containers.

1.3.4 Items of the RS technical supervision as well as production processes other than provided for in these Rules where special requirements are placed thereupon are specified by the Register as items of technical supervision in each particular case, and technical requirements for such items are specified as additional requirements.

Later, based on the results of technical supervision during manufacture and in service, the items of technical supervision may be introduced into the relevant parts of the RS rules and the RS Nomenclature.

1.3.5 Scope of technical supervision is established by the following provisions of these Rules.

1.3.6 A possibility of deviations from the RS requirements, where application of those requirements, methods and scope of supervision prescribed by RS is impracticable or unreasonable, is decided by RHO upon a request of the RS Branch Office responsible for carrying out technical supervision.

1.3.7 During technical supervision surveyor may allow deviations from the approved technical documentation only within his/her authorization scope.

1.3.8 Items subject to the Register technical supervision in accordance with the RS Nomenclature may be used for their intended purpose only in case documents of the Register or manufacturer's documents, in cases provided for in the RS rules, or other classification societies are available.

The possibility of recognition of documents for materials and products manufactured under technical supervision of ACS without the Register authorization is decided by the Register in each particular case during survey of these materials and products to an extent sufficient to confirm their compliance with the RS requirements, conventions, IMO recommendations, standards and normative documents.

1.3.9 In case any defects are detected and there is any doubt about the feasibility of using the materials and products as intended, the required control surveys shall be carried out. In case of unsatisfactory results of the surveys, the use of the materials and products is not permitted regardless of the availability of the prescribed documents.

1.3.10 Items of the RS technical supervision shall be manufactured in accordance with the RS-approved technical documentation.

1.3.11 Review and approval of technical documentation for items of the RS technical supervision are carried out in compliance with the General Regulations for the Technical Supervision of Containers, Rules for the Manufacture of Containers and the Rules for the Approval of Containers for the Transport of Goods Under Customs Seal (where applicable).

1.3.12 When carrying out technical supervision, the Register reserves the right to check the compliance of the design, technology and production standards, which are not required but affect the fulfillment of the RS rules.

1.3.13 Technical supervision of the manufacture of containers, materials and products shall determine their compliance with the requirements of the approved technical documentation and the RS rules. During technical supervision the Register shall not determine a grade or a category of the product quality and shall not check if the safety engineering, sanitary and labor organization requirements are met, as well as other production aspects beyond the Register terms of reference.

1.3.14 In its activity the Register does not substitute the prescribed activity of the state supervision authorities or officials of owner, shipyard or firm.

1.3.15 The Register may impose in the course of technical supervision the necessary requirements for the items and production processes not supervised by the Register if it appears that application thereof has resulted or is likely to result in violation of the RS rules.

1.3.16 The Register carries out technical supervision during manufacture of materials and products at the firm (manufacturer) by means of surveys. Thus, all the questions shall be settled within the frames regulated by the RS requirements.

RS performs its duties during the tests according to the approved test program and technical documentation checking the fulfillment of the RS requirements. Relevant RS documents are drawn up upon results of the technical supervision.

1.3.17 The Register can entrust technical personnel at the firm (manufacturer) with the check tests or part thereof aiming to check the compliance of items of the RS technical supervision with the RS requirements (refer to 1.5).

1.3.18 In case of the differences associated with requirements and decisions of the surveyor carrying out technical supervision, a designer, owner or firm may apply directly to the RS Branch Office to resolve the problem. In case of the differences with the RS Branch Office, an appeal containing justifications together with a copy of the RS Branch Office decision may be sent to RHO.

1.3.19 The Register performs its supervision activities on condition that manufacturers and individuals meet their commitments on manufacturing adequate products. In case of any structural deficiencies of the item of technical supervision, unsteady production process, low technological discipline and inadequate efficiency of quality system at the firm, the Register does not admit any claims for delays in production, caused by an increase in the scope of surveys of the products because of the above reasons.

1.3.20 The Register charges for the services rendered, in accordance with the procedure established in the General Conditions for the Provision of Services by the Russian Maritime Register of Shipping (hereinafter referred to as the General Conditions for Rendering Services).

1.4 TYPES OF TECHNICAL SUPERVISION

1.4.1 Table 2.1.4 of the General Regulations for the Technical Supervision of Containers contains types of technical supervision during manufacture of containers included in the RS Nomenclature (refer to Table 2.1.2 of the General Regulations for the Technical Supervision of Containers) as well as types of documents issued or certified upon results of the technical supervision.

1.4.2 When determining forms of technical supervision during manufacture of materials and products for containers, items of technical supervision shall be divided into groups (refer to Table 2.1.3 of the General Regulations for the Technical Supervision of Containers). Possible schemes of technical supervision during manufacture of products for

different groups are given in Section 5, Part I "General Regulations for Technical Supervision" of the Rules for Technical Supervision during Construction of Ships and Manufacture of Materials and Products for Ships.

1.5 REQUESTS, CONTRACTS AND AGREEMENTS ON TECHNICAL SUPERVISION

1.5.1 Where the necessity of the RS technical supervision in contracted documentation for manufacture of items of the RS technical supervision is indicated, the firm shall address to RS a written request to carry out technical supervision and to guarantee payment of the Register services, reimbursement of the Register expenses, as well as with the confirmation of familiarization and agreement with the General Conditions for Rendering Services. The General Conditions for Rendering Services are constituent and integral part of all the contracts concluded by the Register.

1.5.1.1 If in case of type approval the firm is not the manufacturer of the products for containers, the firm shall, in addition to the provisions of 1.5.1, be authorized by the manufacturer (which shall be documented) to do the following:

.1 to submit technical documentation for the product for RS review and approval or to use the technical documentation approved by RS;

.2 to arrange for survey of the product within the necessary scope;

.3 to arrange for testing of the product within the necessary scope or to use reports of the tests earlier conducted by the manufacturer;

.4 to supply the container, material or product and to install and mount it if necessary.

1.5.1.2 Deviations from the provisions of 1.5.1.1 shall be regulated in accordance with 1.3.6.

1.5.2 The request shall provide the information to an extent sufficient for review and execution thereof. In reviewing the request for technical supervision during manufacture of the material or product, a kind of approval (single or type approval) and for technical supervision during manufacture of container, type shall be identified.

1.5.3 Upon results of request review depending on the particular conditions of the future technical supervision (scope and item of supervision, duration, etc.), the Register, being guided by the regulations in force, decides on the necessity to conclude a contract on technical supervision or carries out technical supervision based on the request without concluding the contract.

1.5.4 The contract on technical supervision of the Register at the manufacturer specifies the items of technical supervision and regulates mutual relations, rights and responsibilities of the parties in the course of the Register technical supervision.

The contract specifies cost of technical supervision, procedure and terms of payment. Where technical supervision is carried out based on the request, without concluding the contract, services are paid and expenses reimbursed according to the invoices made out by the Register.

For concluding the contract for the Register technical supervision, use is made of the established forms or the contract may be drawn up in a free form.

N o t e . Where it is necessary to determine the cost of technical supervision during manufacture of containers the firm shall provide the Register with the list of items of the RS technical supervision (refer to 3.2.2 and 5.2.2).

1.5.5 The Register can entrust the firm's (manufacturer's) technical personnel with performance of the check tests or part thereof, serial materials and products for containers

that in addition to the contract, is drawn up by the Manufacturer's Quality Control System Certificate (CKK 1 or CKK 2 Certificate).

The procedure to issue CKK 1 and CKK 2 is indicated in Section 7, Part I "General Regulations for Technical Supervision" of the Rules for Technical Supervision During Construction of Ships and Manufacture of Materials and Products for Ships.

1.5.5.1 The contract as well as CKK 1 and CKK 2 become invalid in case of inadequate fulfilment of the commitments under the contract, including payments for the RS services as well as in the following cases:

.1 upon expiry of type approval for material or product manufactured by the firm (manufacturer);

.2 subject to non-compliance of the firm (manufacturer) with the requirements of survey;

.3 contract and/or CKK 1 or CKK 2 Certificate expiration;

.4 contract and/or CKK 1 or CKK 2 termination.

1.6 PROVISION OF TECHNICAL SUPERVISION

1.6.1 The manufacturer shall provide all the conditions necessary for the Register to carry out technical supervision, namely:

.1 provide a surveyor with:

free access to all places where the items of the RS technical supervision are manufactured;

safety of the surveyor during survey;

availability of the officials authorized to present to the surveyor containers for survey;

timely information of the time and place of surveys and tests;

possibility of inspection of any part and assembly of the container or product with the use of necessary means and tools;

.2 provide a surveyor with:

necessary documentation;

manufacturer's quality control documents;

standards and other normative documents;

possibility of inspection of any container or product out of the batch presented.

1.6.2 The manufacturer's notices are drawn up on the work stages or the items of technical supervision readiness for survey and on the invitation of the Register surveyor.

1.6.3 Where the conditions required for performance of surveys are not fulfilled by the manufacturer, the surveyor has the right to refuse to carry out surveys and to witness tests of the item of technical supervision.

1.7 TECHNICAL DOCUMENTATION

1.7.1 Prior to commencement of the technical supervision during the manufacture of items of the RS technical supervision the surveyor shall make sure that the firm is provided with the RS-approved technical documentation.

1.8 DOCUMENTS

1.8.1 Upon results of the Register technical supervision during manufacture of items of the RS technical supervision the documents provided for by the RS List of Documents to be Issued during Technical Supervision and specified in 1.4 of the General Regulations for the Technical Supervision of Containers, are drawn up.

1.9 TYPE APPROVAL OF MATERIALS AND PRODUCTS

1.9.1 Requirements for CTO on materials and products for containers are given in Section 6, Part I "General Regulations for Technical Supervision" of the Rules for Technical Supervision during Construction of Ships and Manufacture of Materials and Products for Ships, as well as relevant provisions of these Rules.

2 TECHNICAL SUPERVISION DURING MANUFACTURE OF MATERIALS AND COMPONENT PARTS

2.1 GENERAL

2.1.1 The general provisions on the organization of technical supervision during manufacture of materials and component parts are given in Section 1.

2.1.2 During technical supervision of the manufacture of products the surveyor checks the used materials and component parts according to the manufacturer's documents or the OEM documents of another classification society (refer to 1.3.8), when the materials or components are included in the RS Nomenclature in 2.1.3 of the General Regulations for the Technical Supervision of Containers, for conformity thereof with the requirements of the Register.

2.1.3 The surveyor may require the incoming control of materials and component parts when in doubt of their conformity with the Register requirements or if it is found that in case where they are used the items of technical supervision will not meet those requirements.

In case of unsatisfactory results of the incoming control the use of such materials and component parts is not allowed, regardless of availability of certificates and other documents certifying their conformity with the requirements of technical documentation.

N o t e . In each case the scope of testing shall be specified as regards the requirements of the applicable parts of the Rules for the Manufacture of Containers containing the requirements to the material or product. The tests shall be carried out in the laboratories having Recognition Certificate of Testing Laboratory or complying with the applicable requirements of 1.6.1.5, Part I "Basic Requirements" of the Rules for the Manufacture of Containers being part of the firm (manufacturer).

2.1.4 In case of unsatisfactory results of the incoming control the results of survey are presented in the form of the Register Report. A copy of the Report is forwarded to the firm (manufacturer).

3 TECHNICAL SUPERVISION DURING MANUFACTURE OF PRODUCTS

3.1 GENERAL

3.1.1 The provisions of this Section apply in technical supervision during manufacture of products listed in the RS Nomenclature.

3.1.2 The Section contains the technical supervision requirements during manufacture of preproduction and serially produced articles on the firm (manufacturer).

3.1.3 The general provisions on the organization of technical supervision during manufacture of articles are given in Section 1.

3.2 TECHNICAL SUPERVISION

3.2.1 The technical supervision is effected by carrying out surveys according to the list of items being the main working document of the supervision.

3.2.2 The list of items is developed by the manufacturer based on the RS Nomenclature and Table 3.2.3 for each preproduction (one-off) product and also for serially-produced products, and is agreed with the RS Branch Office performing technical supervision.

The RS Branch Office can change the list of items to extend the scope of control or for its cutting being guided therewith by production conditions and products quality, as well as by the results of supervision during manufacture of containers and technical supervision of containers in service.

3.2.3 The scope of technical supervision and the prescribed types of checks, examinations and inspections performed by the surveyor in surveying technical supervision items according to the list are given in Table 3.2.3.

Depending on the conditions of the Register technical supervision, the surveys according to Table 3.2.3 are effected by the surveyor or personnel of the firm's (manufacturer's) technical control body.

Additional requirements to the scope of technical supervision of corner and intermediate fittings are given in Appendix 1.

Table 3.2.3

No.	Item of technical supervision	Verification						control of flow detection	tests	marking	branding
		technical documentation	material and visual examination	matching of parts	welding operations	manufacture of parts and assemblies	assembly of products				
		3.3	3.4`	3.5	3.6	3.7		3.8	3.9	3.10	
1.	**Products:**										
1.1	end frames	+	+		+	+	+	+	+	+	+[1]
1.2	corner and intermediate fittings	+	+				+	+	+	+	+[1]
1.3	vessels of the tank containers	+	+	+	+	+	+	+	+	+	+[1]
1.4	tank heads	+	+	+	+	+	+	+		+	+[1]
1.5	tank shells	+	+	+	+	+	+	+		+	+[1]
1.6	tank hatches	+	+		+	+	+		+	+	
1.7	frangible disks	+	+				+			+	
1.8	fusible elements	+	+				+			+	
1.9	pressure-relief (safety) valves	+	+		+		+		+	+	
1.10	vacuum valves	+	+		+		+		+	+	
1.11	stop valves of tank	+	+		+		+		+	+	
1.12	covers for containers	+	+				+			+	
1.13	ropes for fastening a cover to a container	+	+				+			+	
1.14	lifting set for offshore containers	+	+		+	+	+	+	+	+	+
1.15	components of lifting sets for offshore containers	+	+		+	+	+	+	+	+	
1.16	refrigerating and/or heating appliances of a container	+	+			+	+		+	+	
1.17	(electrical) sensors and indicators of level	+	+				+			+	

[1] On each product tested under the RS technical supervision.

3.3 TECHNICAL DOCUMENTATION

3.3.1 Manufacture of products as well as production processes shall be performed under the Register supervision in accordance with the approved technical documentation.

3.4 MATERIALS AND VISUAL EXAMINATION

3.4.1 Materials intended for the manufacture of products shall meet the requirements of the technical documentation approved by the Register.

Along with that, availability of the RS brands on the material (where applicable) and compliance of the firm's (manufacturer's) marking with the documents confirming the quality of this material shall be checked.

If the marking does not correspond to the provided documents for material or if brands are unavailable (where applicable), the RS surveyor is entitled to require repeated tests of this material.

3.4.2 Material shall be checked by external examination for absence of defects (dents, hollows, cracks, etc.) which may be considered as an indication for rejecting the material. Special attention shall be paid to the sealing materials for fittings.

3.4.3 Materials subject to RS branding are listed in the RS Nomenclature.

3.4.4 The procedure of branding, transfer of brands during matching of parts, etc., is given in the Instructions on Branding of Items of the Register Technical Supervision (refer to Appendix 2, Part I "General Regulations for Technical Supervision" of the Rules for Technical Supervision During Construction of Ships and Manufacture of Materials and Products for Ships).

3.5 MATCHING OF PARTS

3.5.1 Cold bending of steel plates shall be allowed to a radius not less than trice the plate thickness.

3.5.2 Heating of plates for forming, flanging, flaring and other similar work as well as the conditions and heating monitoring method shall comply with the practice of the firm (manufacturer).

3.5.3 The formed and flared parts and other components after hot treatment shall have no bursts, cracks, shoulders, crumples, folds, lamination, dents, etc.

3.6 WELDING

3.6.1 Prior to welding, edge preparation which shall be carried out in compliance with national standards and/or drawings approved by the Register shall be checked. The surface of the edges shall be free of cracks, lamination and other defects.

3.6.2 Welding may be permitted after verification that the used welding consumables comply with the technical documentation approved by the Register; along with that, the welders shall have documents certifying their qualifications.

3.6.3 Welding of the components, their subsequent dressing and after-welding heat treatment shall be performed in compliance with the technological process approved by the Register.

N o t e . The decision on recognition of documents confirming the results of check tests of welding production processes surveyed by ACS or an authorized competent body is made by the Register in each particular case on the basis of sufficiency of the submitted documents for evaluation of the

compliance of welding production process with the requirements of 3.7.2, Part I "Basic Requirements" of the Rules for the Manufacture of Containers and the RS-approved technical documentation.

Results of the review of the above-mentioned documents and confirmed possibilities of their application shall be presented in the form of the Register Report.

3.7 MANUFACTURE OF THE PRODUCT COMPONENTS AND ASSEMBLIES. FITTING-UP

3.7.1 General.

3.7.1.1 Before assembly, the components of the products shall be checked for compliance with the drawing dimensions (plate thickness, flanging radii, hole pitch, etc.), markings and documents for them. For edge preparation for welding refer to 3.5.1.

3.7.1.2 The components and assemblies shall be fitted up within tolerance for the clearances between elements according to the technical documentation approved by the Register.

3.7.1.3 In order to obtain the required mating between them, the components joined shall not be straightened through an excessive interference by bolts, tacks or mated in cold condition by blows. If necessary mating may be carried out by heating.

3.7.2 Vessels of tank containers, tank heads and tank shells.

3.7.2.1 After welding, the shell shall be calibrated to eliminate the shape distortions.

3.7.2.2 After heat treatment and machining, the tank heads shall be thoroughly examined. No bulges, dents, deep scores, metal thinning-out shall be permitted. Longitudinal scores of not more than negative deviation limits provided by the relevant standards and technical conditions or if after their elimination the wall thickness is less than permitted by calculations shall be permitted on the cylindrical part.

3.8 CONTROL OF FLOW DETECTION

3.8.1 Inspection of the welded joint quality shall be performed after heat treatment, if provided.

3.8.2 The scope of the butt weld inspection, the choice of the inspection method as well as requirements for assessment of butt weld quality shall comply with the technical documentation approved by the Register.

When assessing the weld quality, the guidelines of Part XIV "Welding" of the Rules for the Classification and Construction of Sea-Going Ships or international and/or national rules for pressurized vessels shall be taken as a guide adopted on the firm (manufacturer).

3.8.3 Reports (Acts) confirming results of flow detection shall contain information specified in 3.2.7, Part XIV "Welding" of the Rules for the Classification and Construction of Sea-Going Ships.

3.9 TESTS

3.9.1 General.

3.9.1.1 Product tests shall be carried out by the Register approved test program.

3.9.2 Hydraulic tests, general.

3.9.2.1 Hydraulic tests by pressure indicated in 3.7, Part IV "Tank Containers" of the Rules for the Manufacture of Containers shall be conducted in the presence of the RS surveyor on condition that:

all assembling, welding and weld inspecting operations are completed and accepted by the technical control body of the firm (manufacturer);

components of the product have no insulation and other protective coatings;

component or product has been surveyed by the RS surveyor;

devices intended for tests (instruments, etc.) have documents of the appropriate competent authorities.

3.9.2.2 Hydraulic tests shall be conducted with the current regulations and the firm's (manufacturer's) instructions being adhered to.

3.9.2.3 The temperature of water and ambient air shall be not lower than + 5 °C. The difference in water and ambient air temperature shall preclude sweating.

3.9.2.4 Pressure gauges used in hydraulic tests shall have an accuracy class not lower than 2,5. Pressure gauges shall be calibrated.

3.9.2.5 The pressure during the test shall rise smoothly without water hammers.

3.9.2.6 No other works accompanied by noise hindering the tests shall be performed during the hydraulic tests.

3.9.2.7 During the hydraulic tests the pressure shall be raised up to the proof pressure and shall be maintained during the time period required for examination but not less than 30 min.

3.9.2.8 If during the tests, knocks, booms are heard in the product, or defects affecting the strength thereof are detected, the test shall be interrupted and resumed anew only after correction of these defects.

When the product is held under the proof pressure, no pressure drop shall take place.

3.9.2.9 Upon completion of the hydraulic test of the product, the RS surveyor shall carry out internal examination (if the product is accessible for examination), in the process of which the accessible areas shall be checked for condition of the working surfaces, absence of residual deformation and other defects.

Appearance of sweating and water drops on the welds shall not be permitted. Such welds shall be chipped out and welded anew. Correction of the weld defects by caulking, centre-punching or other mechanical methods shall not be permitted.

3.9.2.10 The products shall be considered as having passed the test by proof pressure, if weld leaks, cracks, local bulges, residual deformations and other indication of any joint disturbances are not found.

3.9.3 End frames.

3.9.3.1 Tensile testing of end frames shall be carried out by upper corner fittings with application of force *1/2R* on each fitting with fastened bottom fittings.

3.9.3.2 Number of end frames for testing is established by the Register upon agreement with the firm depending on stability of workmanship but not less than 10 % from the batch.

3.9.3.3 The products shall be considered as having passed the test, if cracks, residual deformations and other indication of any joint disturbances are not found.

3.9.4 Vessels of tank containers.

3.9.4.1 Vessels of tank containers shall be hydraulically tested in accordance with 3.9.2.

N o t e . Upon agreement with RHO it is permissible to replace hydraulic tests by other testing methods by the Register approved test program.

3.9.4.2 Each vessel is subject to testing.

3.9.5 Tank hatches, stop valves and pressure-relief (safety) valves.

3.9.5.1 Products shall be hydraulically tested in accordance with 3.9.2.

3.9.5.2 The pressure-relief valves capacity is checked on their prototypes. Where a flame arresting mesh is available, inflammability of combustible mixture vapors at specified temperature shall be checked.

3.9.5.3 Number of serial products for testing is established by the Register upon agreement with the firm depending on stability of workmanship but not less than 10 % of the presented batch. If nonconformities are identified, each product is subject to testing.

3.9.6 Lifting sets for offshore containers and their components.

3.9.6.1 Requirements for testing prototype and type-series lifting sets for offshore containers or their components (when approved separately) are specified in 9.6, Part VII "Offshore Containers" of the Rules for the Manufacture of Containers.

3.9.7 Refrigerating and/or heating appliances of a container.

3.9.7.1 Requirements for testing prototype and type-series refrigerating and/or heating appliances of a container are given in Section 3, Part III "Thermal Containers" of the Rules for the Manufacture of Containers.

3.10 MARKING AND BRANDING

3.10.1 Marking of products is carried out in accordance with acting provisions on the firm (manufacturer) as well as with normative documents with obligatory consideration of requirements of the RS rules and the Register approved documentation.

3.10.2 All manufactured products shall be marked including factory number and year of manufacture.

3.10.3 Requirements for marking of service equipment are given in 4.4, Part IV "Tank Containers" of the Rules for the Manufacture of Containers.

3.10.4 Requirements for marking of lifting sets for offshore containers and their components are given in 9.7, Part VII "Offshore Containers" of the Rules for the Manufacture of Containers.

3.10.5 Requirements for marking of refrigerating and/or heating appliances of a container are given in Section 4, Part III "Thermal Containers" of the Rules for the Manufacture of Containers.

3.10.6 For lifting sets for offshore containers, the RS brand is put near the date of manufacture on the identification plate as well as near the factory number on the sleeve or on the upper link of the lifting set sling.

N o t e . When issuing C3 for lifting set branding may be carried out by the firm's (manufacturer's) authorized person, which shall be specified in the Contract for RS technical supervision.

3.10.7 For end frames, vessels of tank containers, tank heads and tank shells, the RS brand is put near the factory number and year of manufacture.

3.10.8 Information on branding is given in Appendix 2 to Part I of the Rules for Technical Supervision during Construction of Ships and Manufacture of Materials and Products for Ships.

3.11 DOCUMENTS

3.11.1 General.

RS documents shall contain the following information:
name and site address of the firm (manufacturer);
name of product;
type of product and/or model and/or relevant catalogue number;
serial number (except for corner fittings).

Additional requirements for information that shall be entered in the documents for products, are given below.

3.11.2 Lifting sets for offshore containers.

In addition to the information indicated in 3.11.1, RS documents shall contain at least the following:

reference to RS CTO (if applicable);
value of working load limit (WLL_{off});
value of minimum required working load limit (WLL_{min});
number of slings;
value of maximum sling angle to the vertical;
value of lifting set mass;
value of rope diameter or caliber of sling links;
value of working load limit (WLL_S) of shackles;
value of sling length;
date of manufacture of lifting set;
description of lifting set components;
identification numbers of shackles;
lifting set complies with the requirements of Section 9, Part VII "Offshore Containers" of the Rules for the Manufacture of Containers.

Additionally:

marking group and type of wire rope shall be indicated for wire rope lifting set;
chain class shall be indicated for chain lifting set and a reference shall be made to the Report drawn up upon results of mechanical tests after heat treatment for chain lifting set manufactured by means of welding;
reference to applicable standards.

3.11.3 Lifting set components for offshore containers.

In addition to the information indicated in 3.11.1, RS documents shall contain at least the following:

reference to RS CTO (if applicable);
characteristics of components (in accordance with standards for components);
reference to documents on material including information on chemical composition and mechanical characteristics;
date of testing.

3.11.4 Corner and intermediate fittings.

In addition to the information indicated in 3.11.1, RS documents shall contain at least the following:

reference to RS CTO (if applicable);
number(s) of heat(s);
value of mass;
quantity;
name of material;
mechanical characteristics (yield stress, tensile strength, elongation, reduction of area, impact energy *KV* at minimum temperature).

3.11.5 Pressure-relief (safety) valves.

In addition to the information indicated in 3.11.1, RS documents shall contain at least the following:

reference to RS CTO (if applicable);
size (inlet hole), for example, DN xxx;
pressure at which the valves begin opening to tolerances (in bar);
actuating pressure of frangible disks (in bar) (if applicable);
actuating pressure of safety vacuum valve (in bar);
operating temperature range (°C);
value of discharge capacity (nm^3/s);

value of discharge area (mm^2);
brand of sealing material;
brand of body material.

3.11.6 Stop valves and manholes.

In addition to the information indicated in 3.11.1, RS documents shall contain at least the following:

reference to RS CTO (if applicable);
value of conditional passage (mm);
value of maximum permissible working pressure (in bar);
operating temperature range (°C);
brand of valve body material;
brand of sealing material.

3.11.7 Vessels of tank containers, heads and tank shells.

In addition to the information indicated in 3.11.1, RS documents shall contain at least the following:

brand of material;
thickness of material;
dimensions including the diameter;
operating temperature range (°C);
hydraulic test pressure (where applicable).

3.11.8 Refrigerating and/or heat appliances of a container.

In addition to the information indicated in 3.11.1, RS documents shall contain at least the following:

designation of refrigerant;
characteristics.

3.12 PARTICULARS OF TECHNICAL SUPERVISION DURING MANUFACTURE OF PROTOTYPES

3.12.1 Prototypes shall be surveyed by the RS surveyor according to the RS Nomenclature.

3.12.2 All the requirements of this Section which apply to the manufacture of the items of supervision in case of stable production shall apply equally to the manufacture of the prototypes.

The assemblies and components of ultimately new engineering designs or manufactured according to new production procedures and techniques shall be additionally subjected to a special check by the Register.

3.12.3 Prototypes shall be subjected to comprehensive tests (applicable to this specimen) according to an extended program approved by the Register to check the reliability and long-term performance of the components, assemblies and the products as a whole as well as to check for the compliance of the parameters and characteristics with the approved technical documentation.

3.12.4 The findings of the surveys and tests of the prototype shall be presented in the Report on Survey of Prototype (Pilot) Specimen (form 6.3.18).

4 TECHNICAL SUPERVISION DURING MANUFACTURE OF MATERIALS FOR CONTAINERS

4.1 GENERAL

4.1.1 The provisions of this Section cover technical supervision during manufacture of materials listed in the RS Nomenclature.

4.1.2 The general provisions on organization of technical supervision during manufacture of materials are given in Section 1.

4.2 ACCEPTANCE OF MATERIAL

4.2.1 Material shall comply with the requirements of the RS-approved technical documentation on the item of application and shall meet the requirements of Section 3, Part I "Basic Requirements" of the Rules for the Manufacture of Containers.

4.2.2 Materials shall be tested under the RS technical supervision in compliance with the standards on material as well as requirements in the Section 3, Part I "Basic Requirements" of the Rules for the Manufacture of Containers applicable to the product to be tested.

Methods, sampling and sample preparation shall meet the requirements of Section 2, Part XIII "Materials" of the Rules for the Classification and Construction of Sea-Going Ships, where applicable.

4.2.3 Welding consumables shall be approved in accordance with Section 5, Part III "Technical Supervision during Manufacture of Materials" of the Rules of Technical Supervision during Construction of Ships and Manufacture of Material and Products for Ships.

4.2.4 During technical supervision the Register has the right to set forth additional requirements to check features of the manufactured products according to application.

4.3 MARKING

4.3.1 General provisions on marking of the materials are given in 1.4.2, Part XIII "Materials" of the Rules for the Classification and Construction of Sea-Going Ships. Peculiarities of marking may also be specified in the appropriate chapters of Part XIII "Materials" of the Rules for the Classification and Construction of Sea-Going Ships containing the requirements for steel, cast iron, copper and light alloys. Marking is carried out according to the effective international and/or national standards.

4.3.2 When semi-finished products are packed in bundles, the manufacturer shall confirm the identification system of every semi-finished product in a bundle. It is allowed to put the RS stamp or brand on labels. When using labels of waterproof film, an imprint of the RS stamp or brand shall be put on the solid surface of these labels.

When branding, it is necessary to be guided by the applicable provisions of Appendix 2 to Part I "General Regulations for Technical Supervision" of the Rules for Technical Supervision during Construction of Ships and Manufacture of Materials and Products for Ships.

4.4 DOCUMENTS

4.4.1 The RS documents mentioned in 1.8 shall be mandatorily supplemented with the Manufacturer's Certificates. The test results shall be specified in the Certificates and/or the

attached test reports. The numbers of the attached reports and Manufacturer's Certificates shall be indicated in the RS Certificate of Conformity.

4.4.2 The content of the Manufacturer's Certificates shall meet the requirements given in the procurement documents and RS-agreed documentation and shall enable to identify the products supplied. The Certificate of Conformity shall contain at least the following:

order number (if applicable);

manufacturer and customer requisites;

general information of material such as: size of semi-finished products, weight, brand and grade of the material, the numbers of the firm's certificates/reports.

5 TECHNICAL SUPERVISION DURING MANUFACTURE OF CONTAINERS

5.1 GENERAL

5.1.1 The provisions of this Section cover technical supervision during manufacture of containers listed in the RS Nomenclature.

5.1.2 The Section contains requirements for technical supervision during manufacture of prototype (first lot) and type-series containers on the firm (manufacturer).

5.1.3 The general provisions on organization of technical supervision during manufacture of containers are specified in Section 1.

5.2 TECHNICAL SUPERVISION

5.2.1 The technical supervision is effected by surveying according to the list of items being the main working document of the supervision.

5.2.2 The list of items may be developed by the firm (manufacturer) based on Table 5.2.3 for each container (batch of containers) and is agreed with the RS Branch Office carrying out technical supervision.

The RS Branch Office can change the list of items to extend the scope of control or for its cutting being guided therewith by production conditions and products quality, as well as by the results of technical supervision during the container operation.

5.2.3 The scope of technical supervision performed by the RS surveyor in technical supervision of containers according to the list is given in this Section.

Depending on the type of technical supervision chosen by the firm (manufacturer) taking into account Table 5.2.3, the surveys are carried out by the RS surveyor and/or specialist of Quality Control Department of the firm (manufacturer).

Form 2 of the technical supervision is applied at serial manufacture of containers on the firm (manufacturer) surveyed in accordance with the requirements of 1.5, Part I "Basic Requirements" of the Rules for the Manufacture of Containers with issuance of СПИ.

Table 5.2.3

No.	Stages of technical supervision during manufacture of containers	Section of the RS rules	Forms of technical supervision	
			1	2
1	Technical documentation	5.3	×	×
2	Qualification of personnel	5.4	×	×
3	Welding consumables	5.5	×	×
4	Welding procedures	5.6	×	×
5	Materials and products for containers	5.7	×	–
6	Manufacture of components and assemblies for containers	5.8	×	–
7	Assembly of containers	5.9	×	–
8	Flow detection	5.10	×	–
9	Tests	5.11		
9.1	Prototype of a container, testing to confirm manufacture stability	5.11.2	×	×
9.2	Type-series containers	5.11.3	×	–[1]
10	Final assembly of container	5.12	×	–
11	Marking	5.13	×	×
12	Survey of finished containers	5.14	×	×
13	Branding	5.15	×	×

[1] Required for tank containers and offshore containers.

Notes: 1. "×" means "required", "–" means "not required".
2. Serial manufacture of containers is carried out upon positive results of manufacture and test of a prototype (first lot), refer to Table 2.1.4 of the General Regulations for the Technical Supervision of Containers.

5.2.4 Additional requirements to the scope of technical supervision during manufacture of tank containers with a FRP shell are given in Appendix 2.

5.3 TECHNICAL DOCUMENTATION

5.3.1 Containers are manufactured under the RS technical supervision by the Register agreed technical documentation.

5.3.2 Prior to the beginning of manufacture, availability of letter of conclusion as well as a set of the RS-approved technical documentation are checked on the firm (manufacturer).

The technical documentation shall belong to the firm (manufacturer) or a written confirmation for the right of disposal for manufacture shall be submitted to the Register.

5.4 QUALIFICATION OF PERSONNEL

5.4.1 Welding of containers shall be performed by the welders, who have passed the respective tests in accordance with the RS procedures. Welders shall comply with the requirements of 3.7.3, Part I "Basic Requirements" of the Rules for the Manufacture of Containers.

N o t e . The welders who have passed the tests according to the international and/or national standards (for example, ISO 9606, ASME Section IX, ANSI/AWS D1.1) may be admitted to the welding operations.

Recognition of documents confirming the qualification of welders and issued by another classification society or authorized competent authority shall be determined in each case by the Register depending on the sufficiency of the submitted documents to determine welders' conformity with the requirements of 3.7.3, Part I "Basic Requirements" of the Rules for the Manufacture of Containers and the RS-approved documentation.

The results of considering the above-mentioned documents and confirmation of possible admission for welders shall be issued as a Register Report.

5.4.2 The firm (manufacturer) shall adopt an internal control system during manufacture of containers.

5.5 WELDING CONSUMABLES

5.5.1 Welding consumables used during manufacture of containers shall comply with the requirements of 3.7.1, Part I "Basic Requirements" of the Rules for the Manufacture of Containers and the RS-approved documentation.

N o t e . 1. The decision on recognition of documents confirming the results of welding consumables testing surveyed by another classification society or an authorized competent authority shall be made by the Register in each particular case on the basis of sufficiency of the submitted documents for evaluation of the compliance of 3.7.1, Part I "Basic Requirements" of the Rules for the Manufacture of Containers and the RS-approved documentation.

The results of considering the above-mentioned documents and confirmation of possible admission for welders shall be issued as a Register Report.

2. The decision on application of welding consumables for austenitic steels supplied with the certificates as per form 3.1 of EN 10204 or ISO 10474 standards shall be made by the Register in each particular case on the basis of sufficiency of information, its compliance with the requirements of 3.7.1, Part I "Basic Requirements" of the Rules for the Manufacture of Containers and the RS-approved documentation as well as availability of certified QMS of the firm (manufacture) of welding consumables.

In case of reasonable doubts in the quality of used welding consumables, the Register reserves the right to require additional tests of compliance of the welding consumables to the declared features.

The results of considering the above mentioned documents and confirmation of possible admission for welders shall be issued as a Register Report.

5.5.2 Where marking does not correspond to the provided documents for welding consumables, the RS surveyor reserves the right to require check tests of the welding consumables.

5.6 WELDING PROCEDURES

5.6.1 Welding procedures applied during manufacture of containers shall comply with the requirements of 3.7.2, Part I "Basic Requirements" of the Rules for the Manufacture of Containers and the RS-approved documentation.

N o t e . The decision on recognition of the welding procedure qualification test results (WPQR) surveyed by another classification society or an authorized competent body is made by the Register in each particular case on the basis of sufficiency of the submitted documents for evaluation of the welding procedure compliance with the requirements of 3.7.2, Part I "Basic Requirements" of the Rules for the Manufacture of Containers and the RS-approved documentation.

The results of considering the above-mentioned documents and confirmation of possible admission for welders shall be issued as a Register Report.

5.6.2 Changes made in the production procedures for manufacture of containers followed by amendments of the RS-approved technical documentation for a container, changing of strength characteristics or affect the results of the prototype testing, shall be agreed with the Register prior their manufacture introduction.

5.6.3 During the manufacture of tank container tanks in case the welding procedures, applicable welding consumables are changed and in the case the tank container materials differ from those specified in the approved technical documentation, the mechanical properties of the welding seams shall be checked on the specimen cut from the inspection plates of longitudinal welding seams of the tank in compliance with 2.4, Part XIV "Welding" of the Rules for the Classification and Construction of Sea-Going Ships or in compliance with 3.3, Part IX "Materials and Welding" of the Rules for the Classification and Construction of Ships Carrying Liquefied Gases in Bulk for tank containers carrying gas.

5.7 MATERIALS AND PRODUCTS FOR CONTAINERS

5.7.1 General.

5.7.1.1 On agreement with RHO a limited lot/scope of sheet steel for tanks, rolled metal for manufacturing of pad eyes for offshore containers, fusible elements, covers for containers, ropes for fastening a cover to a container, (electrical) sensors and indicators of level are permitted to be supplied with the documents of the firm (manufacturer) certified by the RS surveyor by applying incoming inspection if the Rules shall be additionally confirmed and with the Register approved technical documentation.

5.7.2 Material.

5.7.2.1 Materials used for the manufacture of containers shall meet the requirements of the Register-approved technical documentation.

Check shall be carried out for availability of the RS documents or factory documents as well as RS brands on the materials indicated in Table 2.1.3 of the General Regulations for the Technical Supervision of Containers.

N o t e s: 1. The decision on recognition of ACS documents on materials shall be made by the Register in each particular case on the basis of sufficiency of the submitted documents for evaluation of the compliance with Section 3, Part I "Basic Requirements" of the Rules for the Manufacture of Containers and the RS-approved documentation.

2. The decision on application of material for manufacture of vessel parts as well as vessels of tank containers manufactured in accordance with the requirements of acting national and/or international standards covering rolled metal for pressure vessels and supplied with the certificates as per form 3.1 and 3.2 of EN 10204 or ISO 10474 standards shall be made by the Register in each particular case on the basis of sufficiency of information, its compliance with the requirements of 3.3, Part I "Basic Requirements" of the Rules for the Manufacture of Containers and the RS-approved documentation as well as availability of certified QMS of the firm (manufacturer) of the welding consumables.

In case of reasonable doubts in the quality of used material, the Register reserves the right to require additional tests of compliance of the material to the declared features.

The results of considering the above-mentioned documents and confirmation of possible admission for welders shall be issued as a Register Report.

5.7.2.2 Within the incoming inspection the compliance of material marking with the documents confirming its quality shall be verified.

Where the marking does not correspond to the submitted documents on material or absence of brands (where applicable), the RS surveyor is entitled to require repeated trials of this material.

5.7.2.3 The material shall be checked by external examination for absence of defects (dents, hollows, cracks, etc.) which may be considered as an indication for rejecting the material.

5.7.2.4 Wood intended for the manufacture of containers shall be checked for absence of sap and other defects the number and size of which shall not exceed allowed values specified in normative documents.

5.7.3 Products.

5.7.3.1 Purchased products indicated in Table 2.1.3 of the General Regulations for the Technical Supervision of Containers shall be checked for compliance of their marking with the documents submitted to the Register as well as RS-approved technical documentation for the container.

Notes: 1. Where the ACS documents for the product are available, one shall be guided by the requirements of 1.3.8.

2. Corner and intermediate fittings manufactured without RS technical supervision including submission of ACS documents shall be checked in the following scope: verification of mechanical properties in accordance with 3.2.4, Part I "Basic Requirements" of the Rules for the Manufacture of Containers. Test samples shall be taken from fittings. The number of fittings shall be determined by RHO in each particular case depending on the number of heats in the batch but not less than one fitting from each batch containing 100 sets.

5.7.3.2 Spring-loaded safety valves shall be tested for opening/closing pressure before installation.

5.7.3.3 In case if the firm (manufacturer) of containers manufactures the products indicated in Table 2.1.3 of the General Regulations for the Technical Supervision of Containers one shall be guided by the requirements of Section 3.

5.7.3.4 The Inspection Department documents for door locks and other products if manufactured by this manufacturer shall be checked.

5.8 MANUFACTURE OF CONTAINER PARTS AND ASSEMBLIES

5.8.1 Container parts and assemblies shall be checked for compliance with the drawing dimensions, markings and documents for them. Absence of cracks especially on parts and assemblies of primary structure shall be checked.

5.8.2 Prior to welding, edge preparation which shall be carried out in compliance with national standards or drawings approved by the Register shall be checked. The surface of the edges shall be free of cracks, lamination and other defects.

5.8.3 The components and assemblies shall be fitted up within tolerance for the clearances between elements according to the RS-approved technical documentation.

5.8.4 In order to obtain the required mating between them, the components joined shall not be straightened through an excessive interference by bolts, tacks or mated in cold condition by blows. If necessary mating may be carried out by heating.

5.9 ASSEMBLY OF CONTAINER

5.9.1 Specified dimensions of containers shall comply with the requirements of the RS rules as well as the RS-approved technical documentation. Special attention shall be drawn to the dimension and inner sizes of container.

For ISO containers dimensions on fittings as well as value of container diagonal differences shall be checked.

For offshore containers correctness of pad eyes installation shall be checked.

5.9.2 Workmanship of the floor, in particular, attachment of boarding to the base rails and cross-members, application of sealing and protective materials at places specified in the documentation, adhesion of the sealing materials with sealing surfaces shall be checked.

When verifying the floor boarding made of glued panels, it is necessary to pay attention to defects in gluing as applied to seams and butts of the bars and boards. It is allowed to manufacture glued panels from timbers with faces prepared for rabbeted joints for gluing. The seams of the floor boards and glued panels shall be made as rabbeted joints. Cracks and defects in gluing of the panel shall be revealed by illumination of the container bottom on the outside.

5.9.3 Documents on impregnation of the floor boards by wood preservatives shall be checked.

5.10 FLAW DETECTION

5.10.1 General.

5.10.1.1 Welding seams of any type of container shall be 100 % VT-tested prior to the application of protective coatings. The minimum quality level according to ISO 5817 is level C. Additional requirements are specified in 5.10.2 and 5.10.3.

5.10.1.2 Non-destructive testing and quality assessment of welded joints shall be performed by testing laboratories (centers) or firms (manufacturers) whose competence and status comply with the requirements to accreditation in accordance with national or international standards.

The Recognition (Accreditation) Certificate issued by the Register or by other authorized national body is a document confirming competence of the testing laboratory. In the latter case the copy of the Certificate with supplements shall be submitted to the RS surveyor prior to start of non-destructive testing.

Requirements for testing laboratories and procedure of their acceptance by RS are given in Section 10, Part I "General Provisions for Technical Supervision" of the Rules for Technical Supervision during Construction of Ships and Manufacture of Materials and Products for Ships.

5.10.1.3 Non-destructive testing and quality assessment of welded joints shall be performed by the specialists who have passed the appropriate training, have the proper qualification and practical experience in a particular NDT method which shall be documented.

Personal qualification level and personnel certification in non-destructive testing shall be determined in accordance with the requirements of national standards (GOST R ISO 9712) unified with the standard ISO 9712 as well as other RS-recognized requirements.

5.10.1.4 Requirements for non-destructive testing of container welded joints by specified methods are given in 3.2, Part XIV "Welding" of the Rules for the Classification and Construction of Sea-Going Ships.

5.10.1.5 The RS surveyor may change location of separate sections for non-destructive testing or extend the scope of testing.

5.10.1.6 Reports confirming inspection results shall contain the information specified in 3.2.7, Part XIV "Welding" of the Rules for the Classification and Construction of Sea-Going Ships.

5.10.2 Tank containers.

5.10.2.1 General requirements for inspection are specified in 5.10.1.

5.10.2.2 Welded joints of vessels of tank containers shall be tested via visual and measuring examination as well as by radiographic and/or ultrasonic methods depending on the applicability and instructions of the RS-approved documentation.

The scope of testing of welded joints shall comply with the RS-approved technical documentation.

When assessing the weld quality, the guidelines of Part XIV "Welding" of the Rules for the Classification and Construction of Sea-Going Ships or international and/or national Rules for pressure vessels in force at the firm (manufacturer) shall be taken as a guide.

5.10.3 Offshore containers.

5.10.3.1 General requirements for inspection are specified in 5.10.1.

5.10.3.2 Scope of non-destructive testing of welded joints of offshore containers shall comply with Table 5.10.3.2. Welded joints between essential primary structure and non-essential primary structure shall be controlled in scope as for non-essential primary structure.

Table 5.10.3.2

Category of structural members	Inspection methods			
	VT	MT[1]	UT[2]	RT[2]
essential primary structure	100 %	100 %	100 % of pad eyes and 20 % of other welds	10 %
non-essential primary structure	100 %	20 %	20 %	10 %
Secondary structure	100 %	–	–	–

[1] If it is impossible to use the PT method, the capillary method shall be used.
[2] Depending on the thickness of the material and its applicability.

5.10.3.3 Quality of welded joints of offshore containers shall be assessed in accordance with Table 5.10.3.3.

Table 5.10.3.3

Assessment of welded joint quality				
VT	MT	PT	UT	RT
ISO 5817[1] Level B	ISO 23278 Level 1	ISO 23277 Level 1	ISO 11666 Level 2	ISO 10675-1[2] Level 1

[1] For aluminum ISO 10042.
[2] For aluminum ISO 10675-2.

5.10.3.4 The operator on non-destructive testing shall be certified as a minimum to Level 2 in accordance with standard ISO 9712.

5.11 TESTS

5.11.1 General.

5.11.1.1 Tests shall be conducted by the Register approved test program.

5.11.1.2 Subject to technical supervision during tests are:

.1 fulfillment by the testing laboratory or firm (manufacture) of requirements of the RS rules and the RS-approved test programs;

.2 scope and conditions of tests;

.3 correct container securing and application of loads;

.4 measurement of container deformations;

.5 conformity of the measurement methods with those specified in the procedure;

.6 pattern and magnitude of deformation of the container components during tests and evaluation of residual deformations of these after unloading;

.7 correct taking of readings of devices and measuring instruments and calculation of deformations;

.8 taking of check measurements of the container with the mass being checked on each container subjected to tests;

.9 strength of welded joints.

5.11.1.3 Where crackling occurs during the tests, the container shall be carefully examined under sufficient illumination from the inside and outside in order to reveal damages of welds or other structural defects.

5.11.1.4 The measuring instruments used during tests shall be calibrated by a competent body and shall have the following minimum accuracy class (error):

Table 5.11.1.4

Measurement device	Accuracy class (error)
pressure gauge	2,5
flow meter	2
thermometer	1
electrical measuring instruments	2
tape measures	2
mass measuring instrument	maximum percentage error 2 %
dynamometer	2

5.11.2 Container prototype, tests to confirm the stability of production.

5.11.2.1 Testing of a prototype container as well as testing to confirm the stability of production shall be performed:

.1 in the testing laboratory recognized by the Register. The requirements for testing laboratories and procedure of their recognition is established in 1.6, Part I "Basic requirements" of the Rules for the Manufacture of Containers, or

.2 in particular cases, at the discretion of the Register, tests may be conducted at the testing laboratories not recognized by the Register. In this case one shall be guided by 1.6.1.5, Part I "Basic Requirements" of the Rules for the Manufacture of Containers, or

.3 on the test bench/facility of the firm (manufacturer) taking into account requirements of 5.11.2.2.

5.11.2.2 When testing the container on the testing bench/facility of the firm (manufacturer) depending on the type of container and conducted tests the following shall be checked:

.1 availability of equipment, devices and measuring instruments which make it possible to conduct all the required tests and measurement of container deformations;

.2 design of equipment, capability of appliances to provide application of external loads to the container in accordance with the requirements of the RS rules and the RS-approved test program;

.3 availability of documents on inspection of the equipment, devices of testing benches and measuring instruments performed by competent bodies and conformity of technical characteristics of the equipment and devices with the specified data of the benches;

.4 provision for stowing and securing of the container during:

.4.1 stacking tests (provision shall be made for all variants of displacement of the test fittings and pads in longitudinal and transverse directions in relation to the top corner fittings of the container);

.4.2 tests for longitudinal and transverse racking (provision shall be made for securing all the bottom corner fittings against vertical movement by means of anchor device, while against transverse movement — only at corners diagonally opposite to those at which forces are applied);

.4.3 tension and compression tests of the bottom frame (provision shall be made for restraint of each pair of the bottom end corner fittings when the bottom is asymmetrical in construction);

.4.4 dynamic test of tank containers;

.4.5 longitudinal restraint tests (provision shall be made for securing all the bottom corner fittings by means of anchor device in which case the pair of the bottom fittings is secured

against vertical and transverse movements, while the pair of top fittings — only against transverse movements);

.5 availability of measuring testing loads to create various internal loading conditions with appropriate layouts thereof in the container; along with that, the loads shall be:

.5.1 weighed, marked with the Inspection Department report issued;

.5.2 checked by the RS surveyor for availability of marking prior to testing;

.6 conformity of the testing truck with the requirements of the Rules for the Manufacture of Containers and its capability of manoeuvre over the entire floor area;

.7 availability of appliances to conduct strength tests of the end and side walls of the container;

.8 availability of a bench (facility) for testing each container for weathertightness in accordance with the requirements of 3.15, Part II "General Freight Containers" of the Rules for the Manufacture of Containers; in this case subject to inspection shall be nozzle diameter, pressure (at nozzle outlet), speed of stream, as well as the possibility of coverage of all the external surfaces of the container. When testing the container with the use of several nozzles, each nozzle shall meet the requirements of 3.15, Part II "General Freight Containers" of the Rules for the Manufacture of Containers;

.9 availability of a bench (facility) to conduct pressure and leakproofness tests of tank containers;

.10 availability of devices and measuring instruments to ensure the necessary check measurements before, during and after the container tests.

5.11.2.3 After 6 years from the date of technical documentation approval, one container shall be tested in the scope agreed by the Register depending on the type of container.

5.11.2.4 One container shall be tested in the scope of a prototype as well as to confirm the stability of production.

5.11.3 Type-series containers.

5.11.3.1 Type-series containers shall be tested at the firm (manufacturer) taking into account the provisions of 5.11.2.2. These tests shall include at least the following:

.1 testing of container (except for tank containers) for weathertightness in accordance with 3.15, Part II "General Freight Containers" of the Rules for the Manufacture of Containers. Each container from the batch shall be subject to testing;

.2 testing of tank containers for strength (without strain gauging), tightness as well as testing of cooling and/or heating system of cargo in tank containers in accordance with 3.7, Part IV "Tank Containers" of the Rules for the Manufacture of Containers. Each tank container shall be subject to testing;

.3 testing of offshore containers for lifting in accordance with 8.2.2, Part VII "Offshore Containers" of the Rules for the Manufacture of Containers. Minimum number of containers subject to testing is given in 8.1.8, Part VII "Offshore Containers" of the Rules for the Manufacture of Containers.

.4 thermal containers shall be tested for airtightness in accordance with 3.4, Part III "Thermal Containers" of the Rules for the Manufacture of Containers. Number of containers shall be established by the Register in each particular case but at least one container from the batch or every 50th container.

.5 thermal containers shall be tested with refrigerating/heating plant for operability thereof in accordance with 3.6, Part III "Thermal Containers" of the Rules for the Manufacture of Containers when the parameters of refrigerating/heating plant are confirmed by the Register. Each thermal container shall be subject to testing.

5.11.4 Evaluation of test results.

5.11.4.1 The container test report shall be certified by the persons authorized to conduct tests and submitted to the Register for consideration. The requirements for test report are given in 1.6.2.4, Part I "Basic Requirements" of the Rules for the Manufacture of Containers.

5.11.4.2 The test results are considered as satisfactory provided that:

.1 elastic and residual deformations of the container components do not render the container incapable of being used for its designed purpose;

.2 standards of leakproofness and special characteristics corresponding to each container type are complied with;

.3 critical safety margins for containers are ensured;

.4 regulated container dimensions as based on check measurements after all tests correspond to those given in the RS Rules.

5.12 FINAL ASSEMBLY OF CONTAINER

5.12.1 Correct installation of fittings and thermal insulation shall be checked during final assembly of the container. Herewith painting and/or application of thermal insulation shall be carried out only after testing.

5.12.2 Internal coating inspection (rubber, polyurethane, enamel, etc.), if applicable, shall be exercised after the pressure test of the tank.

5.12.3 Where the containers comply with the requirements of the Rules for the Approval of Containers for the Transport of Goods under Customs Seal, the attention shall be given to availability and reliability of the door locking bars which make possible sealing of the door lock of only one door half, preventing opening of the second door half without opening of the first one (sealed), obstacles preventing access to the container interiors (guard nets, restriction of the apertures dimensions, etc.), devices for putting customs seals on the fitting compartments of tank containers (if applicable).

5.12.4 Door locks shall be tested for correct installation of the door locks through repeated opening and closing of doors by one person (satisfactory operation of the door locks is characterized by simultaneous entry of the top and bottom cams into the cam retainers when closing the door and correct abutment of the sealing rubber without curling of edges of the rubber section on the outside and inside when the door is closed).

5.13 MARKING

5.13.1 During survey of ISO containers attention shall be given to availability and conformity of the following marking with the requirements of the approved documentation:

.1 the Register emblem (refer to Fig. 5.13.1.1);

.2 code of the owner, identification number of the owner and reference number (correctness of calculation of the reference number shall be checked).

N o t e . Location of mandatory particulars and symbols, registration of the owner's code, algorithm of the reference number calculation, codes of container sizes and types are in conformity with ISO 6346.

.3 code of type and code of size in accordance with ISO 6346;

.4 gross mass and tare mass of the container on the rear wall surface of the container, and tank capacity for tank containers;

.5 date of the next container examination (where applicable);

.6 manufacturer's serial number in the right bottom back corner fitting;

.7 particulars indicating purpose of the fittings;

.8 marking of safety devices.

Fig. 5.13.1.1

5.13.2 The CSC and CCC plates shall be checked for:

.1 conformity of dimensions, location, method of attachment and method of indication of particulars and content thereof with the requirements of 4.1, Part I "Basic Requirements" of the Rules for the Manufacture of Containers and 3.1 of the Rules for the Approval of Containers for the Transport of Goods under Customs Seal.

N o t e . The surveyor shall satisfy himself/herself that the plate is made of durable, non-corrosive and fireproof material.

.2 correct indication of the load values in the CSC Plate;

.3 conformity of the maximum gross mass of the container with the value indicated on the CSC Plate and directly on the container.

5.13.3 Availability and content of the identification plate with tank data shall be checked. Along with that, the surveyor shall make sure that the requirement of the Note to 5.13.2.1 is fulfilled and the plate is attached in an accessible place and the letters and figures are not less than 3 mm in height.

The particulars on the plates shall conform to the requirements of 4.3, Part IV "Tank Containers" of the Rules for the Manufacture of Containers.

5.13.4 The identity of the manufacturer's numbers on the plates and the corner fitting shall be checked.

5.13.5 On offshore containers and lifting sets for them the conformity of the marking, plates and particulars indicated on them with the requirements of Section 7, Part VII "Offshore Containers" of the Rules for the Manufacture of Containers shall be checked.

5.14 SURVEY OF FINISHED CONTAINERS

5.14.1 The following shall be checked during survey of finished containers:

.1 documents for materials and products (including material test reports where necessary);

.2 documents on welders, welding consumables and welding production process;

.3 Inspection Department documents drawn up during manufacture of container (acts, reports, technological charts, etc.);

.4 reporting documents drawn up upon results of non-destructive testing;
.5 test reports (results) of type-series containers;
.6 documents on painting (if applicable);
.7 correct application of marking;
.8 weighing results of each tank-container at the request of the customer and (or) owner and (or) operator;
.9 measurement results of standard dimensions of not less than 10 % of containers of the batch presented (during survey of tank containers, each container shall be subjected to inspection of standard geometric dimensions) shall be checked for compliance with the standard geometrical dimensions of containers with dimensions indicated in the RS-approved technical documentation and the Rules for the Manufacture of Containers.

N o t e s : 1. When containers are manufactured without the conductors ensuring the consistency of geometric dimensions, each container shall be subject to inspection of standard geometric dimensions after assembling.
2. If even one dimension does not correspond to the specified one, the surveyor shall require:
to define and eliminate the causes for the non-conformity between the dimensions;
to inspect the entire batch of containers by dimensions;
to submit an official document on fulfillment of the requirements set out in this Note;
to present repeatedly the batch of containers after checking by the Inspection Department.

5.15 BRANDING

5.15.1 The RS brand shall be put on:
.1 right bottom back corner fitting or on the center on the inner surface of right back corner post (if applicable) of the container (except for offshore containers).
.2 on CSC Plate (in the vicinity of the date of the next survey) and on the plate with particulars on the tank for tank containers (in the vicinity of the date of the next survey).
Where the CSC Plate contains the information on the RS-approved ACEP program or a sticker of established form is applied, the RS brand is put in the vicinity of the date of manufacture of container.
.3 on the information plate as well as on the marking plate in the vicinity of СОД number on offshore container.
5.15.2 When branding one shall be guided by the applied provisions of Appendix 2 to Part I "General Regulations for Technical Supervision" of the Rules for Technical Supervision during Construction of Ships and Manufacture of Materials and Products for Ships.

APPENDIX 1

TECHNICAL SUPERVISION DURING MANUFACTURE OF FITTINGS

1 GENERAL

1 ADDITIONAL REQUIREMENTS

1.1 Workmanship.

1.1.1 All fittings shall have clean surface.

1.2 External examination and checking of dimensions.

1.2.1 The manufacturer shall carry out external examination of 100 % fittings and by measuring of at least 10 % fittings from a batch. Fittings shall be submitted to the RS surveyor for random inspection to check their compliance with the requirements of 5.2, Part I "Basic Requirements" of the Rules for the Manufacture of Containers.

1.3 Strength tests.

1.3.1 Tests are carried out according to the program approved by RS at the manufacturer or in testing laboratories whose competence and status meet the requirements for accreditation in accordance with national or international standards.

The Recognition (Accreditation) Certificate issued by the Register or by other authorized national body is a document confirming competence of the testing laboratory. In the latter case the copy of the Certificate with supplements shall be submitted to the Register surveyor prior to non-destructive testing.

1.3.2 Test loads are established taking into account the requirements of 5.6, Part I "Basic Requirements" of the Rules for the manufacture of containers.

1.4 Stamping.

1.4.1 The RS surveyor puts the RS stamp on each fitting tested under RS technical supervision.

1.5 Certificates.

1.5.1 For each batch the manufacturer shall submit to the RS surveyor a Certificate or specification containing, as a minimum, the following information:

.1 customer and number of contract (order);
.2 type of fitting and casting material category;
.3 number of drawing and/or specification:
.4 method of manufacture;
.5 number of heat;
.6 thermal treatment procedures;
.7 quantity and mass of fittings;
.8 results of non-destructive testing and mechanical tests;
.9 results of fittings measurements.

APPENDIX 2

TECHNICAL SUPERVISION DURING MANUFACTURE OF TANK CONTAINERS WITH FIBER-REINFORCED PLASTICS (FRP) SHELL

1 REQUIREMENTS FOR MANUFACTURE

1.1 The requirements of this section apply to tank containers with FPR shell designed according to Part VIII "Tank Containers with Fiber-Reinforced Plastics (FRP) Shell" of the Rules for the Manufacture of Containers.

1.1.1 The requirements and definitions of Section 5 of the Rules for Technical Supervision during Manufacture of Containers, Materials and Products for Containers apply to tank containers with a FRP shell.

1.1.2 The manufactured structural elements of the FRP shell shall meet the requirements of construction and production documentation approved by the Register.

1.2 Technical supervision of raw materials and components.

1.2.1 The manufacturer of the FRP shell shall have a specification for all the raw materials and components, a description of their storage conditions with shelf life, and certificates for the batches provided by the manufacturer. The specified data shall be included in the process instruction for the manufacture of the shell.

1.2.2 Incoming inspection of raw materials and components.

The following materials and components are subject to incoming inspection:

.1 resins used for shell manufacture. The list of parameters subject to incoming control is given in Table 1.2.2.1;

Table 1.2.2.1

Requirements for incoming inspection of resins used for shell manufacture

List of characteristics to be mentioned in the resin batch manufacturer's specification		List of the resin batch characteristics to be determined by the shell manufacturing firm	
Characteristics	**Testing standard**	**Characteristics**	**Testing standard**
Unsaturated polyester and vinyl ester resins			
1. Viscosity	ISO 3104, ISO 3219, ISO 2555	1. Viscosity	ISO 3104, ISO 3219, ISO 2555
2. Acid number	ISO 2114	2. Gel time and exothermic reaction temperature during cure of binder	ISO 2535
3. Specific density	ISO 12185, ISO 2811, ISO 1675	3. Specific density	ISO 12185, ISO 2811, ISO 1675
4. Appearance	Visual inspection	4. Appearance	Visual inspection
Epoxy resins			
1. Viscosity	ISO 3104, ISO 3219	1. Viscosity	ISO 3104, ISO 3219
2. Epoxy equivalent	ISO 3001	2. Gel time	Testing method shall be specified in the process specification on shell manufacture
3. Specific density	ISO 12185	3. Specific density	ISO 12185, ISO 1675
4. Appearance	Visual inspection	4. Appearance	Visual inspection

List of characteristics to be mentioned in the resin batch manufacturer's specification		List of the resin batch characteristics to be determined by the shell manufacturing firm	
Characteristics	**Testing standard**	**Characteristics**	**Testing standard**
Phenolic resins			
1. Viscosity	ISO 3104	1. Viscosity	ISO 3104, ISO 3219, ISO 2555
2. pH value	ISO 8975	2. Specific density	ISO 12185, ISO 1675
3. Volatile content	ISO 3251	3. Appearance	Visual inspection
4. Specific density	ISO 12185		
5. Appearance	Visual inspection		

.2 reinforcement fibers. The manufacturer of reinforcement fibers shall ensure that the minimum values of strength and elongation modulus are equal to at least 90 % of the values mentioned in the manufacturer's specifications for impregnated fiber bundles, whose strength and elongation modulus are determined in compliance with ISO 9163;

.3 glass fabric. The manufacturer shall mention the mass-to-area ratio determined according to ISO 4605 in the specification and shall provide information on minimum strength and elongation modulus values in the directions along warp and weft;

.4 mats. The manufacturer shall mention mass-to-area ratio in the specification.

1.2.3 Resins.

Resin origin shall be unambiguously identified by the manufacturer's name or trade mark and batch number (code).

1.2.3.1 The resin manufacturer shall submit a certificate for the resin batch with the following information to the FRP shell manufacturer:

resin identification;
manufacturer (including address);
batch numbers;
date of manufacture;
shelf life;
storage conditions.

1.2.3.2 The resin manufacturer shall specify characteristics (refer to Table 1.2.2.1) with tolerance intervals in the certificate for each resin batch.

1.2.3.3 The shell manufacturer shall verify compliance of the resin characteristics specified in Table 1.2.2.1 with the values given in the process specification considering the tolerance intervals.

1.2.3.4 Additives required for resin processing such as catalysts, accelerators, hardeners and thixotropic agents, as well as materials used to improve the shell properties, such as fillers, coloring materials, pigments, etc. shall be specified in the process specification on shell manufacture. Each additive shall be unambiguously identified by the manufacturer's name and/or notation.

1.2.3.5 Polymerized resin hardness shall be determined through Barcol tests according to EN 59 and shall be within permissible values specified in the process specification on shell manufacture.

1.3 Manufacture process for FRP shells.

1.3.1 Change of manufacture process and characteristics of raw materials and components shall be reviewed and approved by the Register.

1.3.2 Shell structural layer placing sequence and orientation shall be specified in the process specification on shell fabrication.

1.3.2.1 The weight content of the fiber reinforcement shall be within a tolerance of +10 % ...– 0 % of the weight content specified in the process specification on shell manufacture. It is allowed to use fiber reinforcement specified in 2.2.6.2 Part VIII "Tank

Containers with Fiber-Reinforced Plastics (FRP) Shell" of the Rules for the Manufacture of Containers.

1.3.2.2 It is allowed to use resins specified in 2.2.6 Part VIII "Tank Containers with Fiber Reinforced Plastics (FRP) Shell" of the Rules for the Manufacture of Containers. It is not permitted to use pigment additives and coloring materials not specified in the process specification on shell manufacture.

1.3.3 Filament winding process.

Shell's structural layers shall be manufactured by winding resin-impregnated unidirectional tapes.

1.3.3.1 Structural layers shall be winded according to the diagram specified in the process specification on shell manufacture. The shell winding diagram shall enable accommodation of loads as specified in 2.2.8, 2.2.9, 2.2.12 and 3.3.3 of Part VIII "Tank Containers with Fiber-Reinforced Plastics (FRP) Shell" of the Rules for the Manufacture of Containers.

1.3.3.2 Tension on the strands of filaments during the winding operation shall be controlled to assure uniformly stressed filaments in the composite shell under loads specified in 2.2.8, 2.2.9, 2.2.12 and 3.3.3 of Part VIII "Tank Containers with Fiber-Reinforced Plastics (FRP) Shell" of the Rules for the Manufacture of Containers.

1.3.3.3 The speed of winding shall be limited only by the ability to meet the tensioning requirements, to conform to the specified winding pattern, and to assure adequate resin impregnation.

1.3.3.4 The bandwidth of the previously impregnated tapes to be wound and the spacing between them shall be controlled to meet the requirements specified in the process instruction for the manufacture of the shell.

1.3.4 Contact molding process.

The shell structure shall consist of random short length (25 to 100 mm) fiber filaments and roving (or biaxial fabric, singular or in combination) in a resin matrix.

1.3.4.1 Flat mats for cylindrical reinforcement shall be laid up as separate layers and overlapped in a staggered pattern. Resin shall be applied to each layer in such a manner as to wet out completely.

1.3.5 Vacuum infusion process. Vacuum infusion process shall be used for fabrication of elliptical or hemispherical end or structural parts of the shell using glass fabrics.

1.4 Technical supervision during manufacture of shells.

1.4.1 When manufacturing a prototype FRP shell, compliance with the manufacture methods in accordance with the requirements in 1.3 is subject to technical supervision.

1.4.2 Visual inspection of the prototype and serial items.

1.4.2.1 The state of structural layers shall comply with the criteria specified in Table 1.4.2.1.

Table 1.4.2.1

Criteria for permissible defects in shell's structural layers

No.	Defects description	Defect intensity and permissible sizes
1	Voids (air bubbles)	6 per 10cm^2, max. 3 mm in diameter, 15 per 10cm^2 max. 1,5 mm in diameter
2	External blisters at shell's structural layers	1 per 1000 cm^2, max. 6 mm in diameter, max. 3 mm in height, min. distance between adjacent defects is 50 mm
3	Surplus heat evolution areas	Not allowed
4	Chipping	Max. 6 mm in diameter or 13 mm in length, max. 1,5 mm in depth
5	Cracks	Not allowed
6	External hairline cracks at shell's structural layers	Max. 25 mm in length, max. 0,4 mm in depth, max. 5 per 1000 cm^2
7	Internal delaminations	Permissible delamination dimensions shall be specified in the process specification on shell manufacture
8	Edge delaminations	Max. 3 mm in length; not allowed on surfaces in contact with transported cargo
9	Dry (poorly impregnated) spots	Not allowed
10	Exposure of structural layer cut ends	Not allowed
11	Foreign inclusions	Max. 10 mm in diameter; through penetration in structural layers is not allowed; shall be completely covered with resin
12	Fish eye defect (a ball-like matter inside transparent or translucent material)	Max. 3 mm in diameter
13	Pits	Max. 6 mm in diameter, max. 1,5 mm in depth. Exposure of fiber cut ends is not allowed
14	External porosity (small pits, ~ 0.25 mm) of the shell's structural layers	Surface intensity max. 24 per 100 cm^2
15	Scratches	Max. 150 mm in length; exposure of fiber cut ends is not allowed
16	Shrinks and pinches	Not allowed for filament winding. Maximum deviation from the specified surface shall not exceed 20 % or 3 mm, whichever is less
17	Tapes winded with gaps (filament winding)	According to the process specification
18	Tapes winded with overlapping (filament winding)	According to the process specification
19	Tape skewing with a gap between fiber bundles (filament winding)	According to the process specification

1.4.2.2 The state of the shell's chemical resistant layer and fire protection layer shall comply with the criteria specified in the process specification on the shell manufacture.

1.4.3 Thickness and dimension inspection for the prototype and serial items.

1.4.3.1 Thicknesses of the shell's structural layers shall be measured. Thicknesses shall be measured in at least 12 points, and the measurement results shall be checked for compliance with the design documentation, and the number and thicknesses of individual layers specified in the process specification on shell manufacture.

1.4.3.2 Diameters, thickness and other physical dimensions of flanges and nozzles for shut-off valves and safety devices shall be checked for compliance with design documentation.

1.4.4 Hardness tests of the prototype and serial items.

1.4.4.1 Hardness of shell's structural and chemical resistant layers after the resin is hardened shall be determined through Barcol tests according to EN 59 and shall be within permissible values specified in the process specification on shell manufacture.

1.4.5 All the connections between parts of thermoplastic liners shall be tested for electric breakdown using an electric tester with operating voltage of 20,000 V. The areas of detected electric breakdown shall be repaired and retested.

1.4.6 The prototype and type-series items are subject to internal test pressure according to 3.7 (except for 3.7.7), Part IV "Tank Containers" of the Rules for the Manufacture of Containers. Under this load, no visible damage of or leakage from the vessel shall be observed.

1.4.7 Verification of type-series items' identity to the prototype.

1.4.7.1 Tests of representative sample shall be performed according to 3.2.2 of Part VIII "Tank Containers with Fiber-Reinforced Plastics (FRP) Shell" of the Rules for the Manufacture of Containers, except for tensile tests (refer to 3.2.2.3). Witness sample may be used only when representative sample cannot be cut out of the shell.

1.4.7.2 For bending creep testing according to 3.2.2.4 of Part VIII "Tank Containers with Fiber Reinforced Plastics (FRP) Shell" of the Rules for the Manufacture of Containers, the test time may be reduced down to 100 h.

1.4.7.3 Test results shall comply with the values assumed for the approved design of the tank container with the FRP shell.

RULES FOR TECHNICAL SUPERVISION OF CONTAINERS IN SERVICE

1 GENERAL

1.1 APPLICATION

1.1.1 The Rules for Technical Supervision of Containers in Service (hereinafter referred to as "these Rules") apply by the Russian Maritime Register of Shipping (RS) during the technical supervision of containers and products for containers in service, repair and modernization.

1.1.2 The requirements of these Rules are mandatory for all organizations and persons involved in service, repair and modernization of containers and products for containers.

When the technical supervision is performed in other countries the provisions of these Rules may be applied regarding salient features and differences in the in the production processes typical of each particular country.

1.1.3 Matters not covered by the Rules are within the competence of the RS Head Office (RHO).

1.1.4 Interpretation of provisions herein is within the RHO terms of reference.

1.2 DEFINITIONS, ABBREVIATIONS AND EXPLANATIONS

1.2.1 Definitions, abbreviations and explanations related to the general terminology of the Rules are given in 1.1, the General Regulations for the Technical Supervision of Containers. For the purpose of this Part, the following definitions and abbreviations have been adopted.

Verified gross mass is the total gross mass of a packed loaded container as obtained by one of the two methods:

method 1: weighing of a fully packed and sealed container;

method 2: weighing all cargo items, packages, securing means and other material equipment to be loaded and added tare mass of the container using the calculation procedures agreed by RS.

Shipper is a legal entity or a person named on the bill of lading or sea bill of landing or equivalent multimodal transport document (e.g. "through" bill of lading) as shipper and/or who (or in whose name or on whose behalf) a contract of carriage has been concluded with a shipper.

1.2.2 Abbreviations.

ACEP — Continuous Survey Program of containers.

RTM — Residual thickness measurement.

1.3 GENERAL

1.3.1 The purpose of the technical supervision is to determine and to establish compliance of items of technical supervision with the RS requirements at the time of survey.

1.3.2 All technical supervision services are rendered by the Register based on requests and agreements with organizations, firms and individuals (refer to 1.5).

1.3.3 Scope of technical supervision is established by the following provisions of these Rules.

1.3.4 A possibility of deviations from the RS requirements, where application of those requirements, methods and scope of supervision prescribed by RS is impracticable or unreasonable, is decided by RHO upon a request of the RS Branch Office responsible for carrying out technical supervision.

1.3.5 In its activity the Register does not substitute the prescribed activity of the state supervision authorities or officials, owners and firm.

1.3.6 In the course of technical supervision the Register may impose the requirements for the items and production processes not supervised by the Register if it appears that application thereof has resulted or is likely to result in violation of the RS rules.

1.3.7 In case of the differences associated with requirements and decisions of the surveyor carrying out technical supervision, an owner or firm may apply directly to the RS Branch Office to resolve the problem. In case of the differences with the RS Branch Office, an appeal containing justifications together with a copy of the RS Branch Office decision may be sent to RHO.

1.3.8 General recommendation on determination of technical condition of tank container are stated in the Recommendations on determination of technical condition of tank container.

1.3.9 The Register charges for the services rendered, in accordance with the procedure established in the General Conditions for Rendering Services by RS.

1.4 GENERAL

1.4.1 Non-destructive testing and quality assessment of welded joints of containers, when required by these Rules, shall be performed by testing laboratories (centers), whose competence and status comply with the requirements for accreditation in accordance with national or international standards.

The Recognition (Accreditation) Certificate issued by the Register or by other authorized national body is a document confirming competence of the testing laboratory. In the latter case the copy of the Certificate with supplements shall be submitted to the Register surveyor prior to non-destructive testing.

Requirements for testing laboratories and procedure of their acceptance by RS are given in 1.6, Part I "Basic Requirements" of the Rules for Manufacture of Containers.

1.5 REQUESTS AND AGREEMENTS ON TECHNICAL SUPERVISION

1.5.1 Where the necessity of the RS technical supervision in contracted documentation for manufacture of items of the RS technical supervision is indicated, the firm shall address to RS a written request to carry out technical supervision and to guarantee payment of the Register services and reimbursement of the Register expenses, as well as with the confirmation of familiarization with the General Conditions for the Provision of Services by RS. The General Conditions for Rendering Services are constituent and integral part of all the contracts concluded by the Register.

1.5.2 The request shall provide the information to an extent sufficient for review and execution thereof.

1.5.3 On the results of the request review, depending on the particular conditions of the oncoming technical supervision (scope, item, duration, etc.) RS being guided by the current regulations, determines the necessity of signing an agreement on technical supervision or performs technical supervision in accordance with the request without signing an agreement.

1.5.4 The contract on technical supervision of the Register specifies the items of technical supervision and regulates mutual relations, rights and responsibilities of the parties in the course of the Register technical supervision.

The contract specifies cost of technical supervision, procedure and terms of payment. Where technical supervision is carried out based on the request, without concluding the contract, services are paid and expenses reimbursed according to the invoices made out by the Register.

For concluding the contract for the Register technical supervision, use is made of the established forms or the contract may be drawn up in a free form.

1.6 PROVISION OF TECHNICAL SUPERVISION

1.6.1 The manufacturer shall provide all the conditions necessary for the Register to carry out technical supervision, namely:

.1 provide a surveyor with:

.1.1 free access to all places of work performance;

.1.2 occupational health and safety compliance during the survey as applied to the items of technical supervision;

.1.3 availability of the officials authorized to present to the surveyor containers and container products for survey;

.1.4 timely information of the time and place of surveys and tests;

.1.5 possibility of inspection of any part and assembly of the container and/or product with the use of necessary means and tools;

.2 provide a surveyor with:

.2.1 necessary documentation.

1.6.2 Where the conditions required for performance of technical supervision are not fulfilled by the manufacturer, the surveyor has the right to refuse to carry out technical supervision.

1.7 DOCUMENTS

1.7.1 Based on results of the Register technical supervision, the documents provided for by the RS List of Documents to be Issued during Technical Supervision and specified in 1.4 of the General Regulations for the Technical Supervision of Containers, are drawn up.

2 RECOGNITION AND AUDIT OF FIRMS

2.1 GENERAL

2.1.1 The requirements of this section apply to firms performing the activity related to containers, the types of which are given in Table 2.1.5 of the General Regulations for the Technical Supervision of Containers.

2.1.2 Check of conformity or recognition of firm is confirmed by issuing RS СП, ССП or СПО and includes:

.1 review of documents confirming the firm's compliance with the Register requirements;

.2 survey of the firm, including practical demonstration of completion of the works indicated in the request, verification of the records to ascertain that the firm organization and management are in compliance with the submitted documents and that the firm is able to perform works and render services. During periodical or renewal survey, to comply with this requirement the results of works or services previously endorsed by the Register, may be submitted instead of the practical demonstration. The works performed or services rendered after the preceding survey may be accepted for review.

If the firm is unable to practically demonstrate the performance of works and specific services during the initial survey, the Register may issue a short-term certificate for a period not exceeding 90 days. All stages of work shall be performed in attendance of the RS surveyor. Satisfactory results of works will be considered as a demonstration of the practical ability of the firm to perform the types of works, after that a certificate can be issued for the full term.

2.1.3 When a firm has several work sites, each site shall be surveyed.

2.1.4 When a firm performs residual thickness measurement (RTM), in addition, the requirement of 2.3.4 shall be checked during the survey of firm.

2.2 GENERAL REQUIREMENTS TO FIRMS

2.2.1 Legal status.

2.2.1.1 Legal status of the manufacturer shall comply with the current legislation.

2.2.1.2 The manufacturer shall have organizational structure and the Head Officer.

2.2.2 Personnel.

2.2.2.1 Personnel of the firm shall have the appropriate vocational and special training, as well as qualification required to perform the activity in the area indicated.

2.2.2.2 The firm shall have the regular staff of specialists. Where specialists of other firms are involved in work performance, the firm which personnel in involved in work performance shall have ССП or СП.

2.2.2.3 The firm in responsible for provision of qualification and training of its personnel in compliance with the particular national, international or industrial standard. At the absence of such standards, a firm on its own shall establish the standards for training and qualification of its personnel in compliance with functions to be performed by each employee. The personnel shall also have pertinent experience and be acquainted with operation of any equipment that may be required.

2.2.3 Technique.

2.2.3.1 The firm shall have the following:

.1 technique required for performing the activity in the declared area complying with the declared work based on its characteristics;

.2 place for performing the declared work. Where the work is performed throughout the year, the conditions for performing the declared work shall be provided.

2.2.3.2 The firm shall provide the maintenance of the equipment and facilities in compliance with their operating and maintenance documentation.

2.2.4 Measurement assurance.

2.2.4.1 The firm shall have and apply the necessary measurement assurance, namely:

.1 measuring instruments checked (calibrated) in accordance with the established procedure (valid check-out documents);

.2 testing equipment certified in accordance with the established procedure;

2.2.4.2 The firm shall provide the maintenance of measuring and testing equipment in compliance with their operating and maintenance documentation.

2.2.5 Document files of the firm.

2.2.5.1 The firm shall have the valid normative and technical documents necessary to perform activity in the area indicated in the request, including:

.1 list of activities performed (area of activity);

.2 operating and maintenance documentation of equipment;

.3 duty regulations;

.4 documents on records keeping and archives maintenance.

2.2.6 Subcontractors.

2.2.6.1 Subcontractors recruited by the firm to perform the activity in the area indicated in the request shall fulfill the requirements of this section.

2.2.6.2 The firm shall provide the audit of subcontractors' activity in the area indicated in the request.

2.2.6.3 The firm shall have agreements with subcontractors in the area indicated in the request.

2.3 RECOGNITION AND AUDIT OF FIRMS

2.3.1 General

2.3.1.1 Verification of a firm consists in confirming the ability of the firm to perform work in the declared area in compliance with the requirements of the RS Rules.

2.3.1.2 The firm shall meet the requirements of 2.2 and the requirements of this Chapter.

2.3.1.3 Recognition of the firm by the Register is confirmed by issuing ССП (Certificate of Firm Conformity) in accordance with 1.4 of the General Regulations for the Technical Supervision of Containers.

2.3.2 Requirements

2.3.2.1 *Document files of the firm.*

2.3.2.1.1 The firm shall have the valid normative and technical documents necessary to perform activity in the area indicated in the request, including the programs and testing procedures agreed with RS.

2.3.3 Special requirements to firms performing repair and modernization of containers (codes 40000001, 40000002).

2.3.3.1 *Document files of the firm.*

2.3.3.1.1 Container repair organizational chart implemented at the repair firm with indication of the location of test areas, production process monitoring, storage of materials, accessories, etc.;

2.3.3.1.2 Welder Approval Test Certificates;

2.3.3.1.3 Welding procedures;

2.3.3.1.4 Documents for applicable welding consumables;

2.3.3.1.5 Documents in accordance with 4.2.

2.3.3.2 *The firm shall confirm that it undertakes to:*

2.3.3.2.1 submit to the Register for inspection the containers under repair at various stages of repairing;

2.3.3.2.2 agree with the Register any alterations in the technical documentation on repairs and in repairing procedures;

2.3.3.2.3 fulfil the requirements of the RS Rules;

2.3.3.2.4 submit certificates and relevant documents for accessories and materials used in repairing containers.

2.3.4 Special requirements to firms performing residual thickness measurements of tank container shells (codes 40000001, 40000002, 40000006).

2.3.4.1 Specialists performing RTM shall undergo appropriate training and have valid certificates.

2.3.4.2 RTM shall be performed on the basis of the relevant test procedures agreed by RS, taking into consideration the environmental conditions. Use shall be made of:

.1 measuring instruments checked (calibrated) in accordance with the established procedure;

.2 certified testing equipment.

2.3.4.3 Technical facilities shall comply with the RTM procedures applicable at the firm.

2.3.4.4 Reporting.

2.3.4.4.1 RTM record shall contain:

.1 name and address of the firm;

.2 identification of the report, e.g. report number;

.3 reference to the documents, in compliance with which the activity has been performed;

.4 description (name) of the item, in relation to which the activity has been performed;

.5 place where the activity has been performed;

.6 date when the activity has been performed;

.7 full name, position and signature of the person who approved the report;

.8 number of every page and the total number of pages in the report;

.9 designation: "Test Report" or "Conclusion";

.10 test results with indication of units of measurements in accordance with the testing procedures;

.11 indication that the test results are valid only for the products tested.

2.3.4.4.2 Reports shall be stored in the firm for not less than 5 years under conditions of confidentiality. This requirement shall be specified in the firm documents.

2.4 RECOGNITION OF FIRMS

2.4.1 General.

2.4.1.1 Verification of a firm with issuing СП (Recognition Certificate) consists of confirming the possibility and capability of the firm to perform work in the declared area under consistent quality and of adequate level in compliance with the requirements of the Rules.

On receipt of СП the scope of technical supervision where the attendance of the RS is mandatory shall be agreed between the firm and RS.

N o t e . The RS surveyor shall be in attendance during the tightness and strength tests of tank containers.

2.4.1.2 The recognition of the firm with issuing СПО in each particular case shall be determined by the RHO and consists of verification of the feasibility and ability of the firm to

perform work on examination of containers, except for tank containers, in compliance with the criteria of safe container operation stated in these Rules.

2.4.1.2 The firm shall meet the requirements stated in 2.3 and the requirements of this chapter.

2.4.1.3 Recognition of the firm by the Register is confirmed by issuing Recognition Certificate (СП) or Recognition Certificate for the Firm Performing Freight Container Inspection (СПО) that is issued in accordance with 1.4 of the General Regulations for the Technical Supervision of Containers.

N o t e . For СП obtaining, the firm shall submit to the RS surveyor at least 10 tank containers or 30 containers of other types with the positive results. For СПО obtaining, the firm submit to the RS surveyor at least 30 containers with positive results.

2.4.2 Requirements.

2.4.2.3 *Checking and control.*

2.4.2.3.1 The firm shall ensure control of all services rendered. An authorized supervisor shall have at least two years of work experience as a performer in the work area in respect of which the recognition is requested by the firm.

2.4.2.3.2 The firm shall take measures on elimination and prevention of non-conformities and complaints against the firm activity in the area indicated in the request.

2.4.2.4 *Technique.*

2.4.2.4.1 A log of the applicable equipment shall be maintained and be available at the firm. Such a log shall contain the information on maintenance and the results of calibration and checkout.

2.4.2.5 *Data control.*

2.4.2.5.1 Where computers are used for collection, processing, recording, transfer, storage, measuring, assessment and control of data, the engineering capabilities (characteristics of software to be applied for the above purpose, shall be documented and confirmed by the firm. This requirement shall be met prior to using thereof and, where necessary, shall be repeatedly confirmed.

N o t e . Commercial software application (e.g. text editor, data bases and statistical software) being used with standard characteristics within the estimated field of application may be considered as sufficiently checked and requiring no further verification.

2.4.2.7 *Document files of the firm.*

2.4.2.7.1 The firm shall have the valid normative and technical documents necessary to perform activity in the area indicated in the request, including:

.1 brief description of the firm, e.g., organizational chart and management structure, as well as subsidiaries included in the recognition process.

.2 programs and procedures of testing;

.3 a list of assigned agents, subsidiaries and subcontractors;

.4 the firm experience in the particular field of services rendering;

.5 a list (log) of the employees containing an information on the age, education received in educational institutions, occupational training and experience in respect of which the recognition is requested by the firm;

.6 documents confirming approval/recognition from other organizations (where available);

.7 a log of the customer claims and corrective actions;

.8 the documents for recording the detected damage and defects shall be available.

2.4.2.8 *Quality Management System.*

2.4.2.8.1 The firm shall have a documented quality management system to cover at least the following:

.1 The Code of Ethics to conduct the relevant activity;

.2 maintenance of equipment;

.3 measurement assurance, checking (calibration) of measuring equipment;

.4 training programs of operators/technicians/surveyors;

.5 checking and control to ensure compliance of work results with working procedures;

.6 recording and reporting of information;

.7 quality management of subsidiaries, agents and subcontractors;

.8 job preparation;

.9 corrective and preventive actions related to complaints;

.10 periodical verification of procedures for working process, complaints, corrective actions as well as certificate issue, maintenance and management.

2.4.2.8.2 A documented quality management system corresponding to the latest version of ISO series 9001 standard and incorporating the above requirements shall be deemed complying with the requirement of 2.4.2.8.

2.4.2.9 *Reporting.*

2.4.2.9.1 Form and content of reports in the area indicated in the request shall be acceptable for the Register and shall include:

.1 name and address of the firm;

.2 identification of the report, e.g. report number;

.3 reference to the documents, in compliance with which the activity has been performed;

.4 description (name) and identification of the item, in relation to which the activity has been performed;

.5 place where the activity has been performed;

.6 date when the activity has been performed;

.7 information on deviations from the requirements of the documents, in compliance with which the activity has been performed;

.8 entry that the activity has been performed under the RS technical supervision;

.9 full name, position and signature of the person who approved the report;

.10 number of every page and the total number of pages in the report.

2.4.2.9.2 Reports shall be stored in the firm for not less than 5 years under conditions of confidentiality. This requirement shall be specified in the firm documents.

2.4.2.10 *Subcontractors.*

2.4.2.10.1 The firm shall information on agreements and covenants, where any part of the services rendered is subcontracted. Subcontractor presenting anything except for the equipment shall also meet the general requirements specified in 2.4.2.

2.4.2.11 Information on alterations to the certified service operation system.

2.4.2.11.1 In case where any alteration to the documented service rendering system of the supplier is made, such alteration shall be immediately reported to the Register. Re-audit may be required when deemed necessary by the Register.

2.4.3 Special requirements to firms performing repair and modernization of containers (codes 40000001, 40000002).

2.4.3.1 *Document files of the firm.*

2.4.3.1.1 Container repair organizational chart implemented at the repair firm with indication of the location of test areas, production process monitoring, storage of materials, accessories, etc.

2.4.3.1.2 Welder Approval Test Certificates.

2.4.3.1.3 Welding procedures (for code 40000001).

2.4.3.1.4 Documents for applicable welding consumables.

2.4.3.1.5 Documents in accordance with 4.1.

2.4.3.2 *The firm shall confirm that it undertakes to:*

2.4.3.2.1 submit to the Register for inspection the containers under repair at various stages of repairing;

2.4.3.2.2 agree with the Register any alterations in the technical documentation on repairs and in repairing procedures;

2.4.3.2.3 fulfill CCC requirements for design of containers;

2.4.3.2.4 submit certificates and relevant documents for accessories and materials used in repairing containers.

2.4.4 Special requirements to the firm performing freight container examination (except for tank containers) in service in compliance with the CSC requirements (code 40000004 MK).

2.4.4.1 *Legal status.*

2.4.4.1.1 A firm that has the status of a legal entity during inspections of containers shall be independent of the parties interested in the results of inspections.

2.4.4.1.2 The firm shall be responsible for the impartiality and objectivity of the containers inspection results.

2.4.4.1.3 The firm shall be able to demonstrate that it is impartial and that neither the firm nor its personnel are under commercial or other pressure that could affect their technical solutions.

2.4.4.2 *Personnel.*

2.4.4.2.1 The firm's personnel performing the examination of containers shall have valid certificates to confirm completion of a theoretical training course on the subject "Freight containers, international and national requirements".

2.4.4.2.2 Personnel performing container examinations shall have at least 1 year of practical experience in the area of recording or appraisal of freight container technical condition.

2.4.4.3 *Document files of the firm.*

2.4.4.3.1 The firm shall have valid regulatory and technical documents required for stated activities including:

.1 documents which contain requirements for freight containers, CSC and the Register Rules included;

.2 container examination procedure and deformation measurement methodology agreed with RS;

.3 occupational safety documents for container inspection;

2.4.4.4 *Reporting.*

2.4.4.4.1 The form and contents of reports (container examination reports, damage description where necessary) shall comply with the requirements of the RS Rules and include at least the following:

.1 container identification numbers and necessary data from statutory plates;

.2 data on damage, wear and defects to be repaired;

.3 conclusion on the opportunity for the RS certificate issue;

.4 photos of the examined containers and their damage within the scope necessary to determine whether the container condition is in accordance with established requirements.

2.4.4.4.2 Subject to observance of confidentiality provisions, the firm shall keep records (databases) of requests, numbers of the examined containers, issued examination and survey reports.

2.4.4.4.3 The firm shall preserve copies of the issued reports for five years at least, which shall be specified in its documents.

2.5 RECOGNITION OF ORGANIZATIONS OR FIRMS OPERATING WITHIN IMO RESOLUTION MSC.380(94) TO COMMUNICATE THE VERIFIED GROSS MASS OF CONTAINERS

2.5.1 General.

2.5.1.1 The requirements of this section apply to the organizations or firms acting in compliance with IMO resolution MSC.380(94) and engaged in weighing packed and sealed containers using Method 1 as well as shippers using Method 2 to communicate the verified gross mass of containers.

2.5.1.2 Recognition of organizations or firms consists of the Register approval of the feasibility and ability of the firm or organization to perform the work with the consistent quality and at the appropriate level to determine the verified gross mass of containers using Method 1 and/or Method 2.

2.5.1.3 The organizations and firms shall meet the requirements of 2.2 and the requirements of this Chapter.

2.5.1.4 Recognition of the firm by the Register is confirmed by issuing the СП (Recognition Certificate) in accordance with 1.4 of the General Regulations for the Technical Supervision of Containers.

2.5.2 Requirements.

2.5.2.1 *Files of documents*

2.5.2.1.1 For the firms performing the work on determination of the verified gross mass of containers using Method 1:

.1 the procedure and method for container weighing;

.2 a list of the equipment utilized for the containers weighing, the technical documentation (data sheet), information on the routine maintenance carried out, documents declaring the prescribed manner the equipment verification and calibration, the schedules of maintenance of equipment;

.3 documents on the identification system and recording of the documents issued;

.4 list of the trained personnel.

2.5.2.1.2 For the firms performing the work on determination of the verified gross mass of containers using Method 2:

.1 calculation procedure for gross mass of packed including cargo (cargoes), securing, separating and backing materials, etc., as well as their properties if they affect the mass, for example, humidity that shall be regarded by the calculation method;

.2 the documented procedure for weighing method of cargo items and package, including pallets, separating and backing and other materials intended to load and secure, to be packed in the container, and adding tare mass of the container. In doing so, if the third party, besides the shipper, participates in communicating the verified gross mass of a container which has either performed packing of all the cargo items in the container, or a part of them, such party shall notify the cargo owner of the weighing location, claim responsibility for delivery of information on the weighed mass of cargo items; in this case, when loading a container, individual, original sealed packages that have the accurate mass of the packages and cargo items (including any other material such as packing material and refrigerants inside the packages) clearly and permanently marked on their surfaces, do not need to be weighed again when they are packed into the container;

.3 a list of equipment used for weighting, including equipment used by a third party with presenting technical documentation (certificate), information on preventive maintenance made, documents confirming check-out and calibration of equipment, schedules of maintenance of equipment;

.4 documents on the identification system and recording of the documents issued.

2.5.2.2 *Reporting.*

2.5.2.2.1 Form and content of reports shall at least include the following:

.1 unique number and date of issue;
.2 applicant's name and address (shipper);
.3 place and date of weighing;
.4 weighing means and information on its calibration;
.5 identification number of a container;
.6 weighing procedure;
.7 value of the verified gross mass of each container;
.8 declaration confirming that the gross mass of a container(s) has been approved in compliance with SOLAS (refer to IMO resolution MSC.380(94) of 21 November 2014);
.9 performer's full name and signature.

Names of a record's fields shall be both in Russian and in English.

2.5.2.2.2 Under conditions of confidentiality, the organization or firm shall keep records (database) of the requests and issued documents.

2.5.2.2.3 The organizations or firms shall keep copies of the issued reports for at least six months, which shall be established in the documents of the organization or firm.

2.5.2.3 *Checking and control.*

2.5.2.3.1 The organizations or firms shall check the compliance of the activity in the declared area with the requirements established in the documentation, as well as the compliance of the RS-agreed procedures and methods during the work performance.

2.5.2.3.2 The organizations and firms shall take measures on elimination and prevention of nonconformities and claims against the organization and firm's activity in the declared area.

2.5.2.4 Organizations or firms shall confirm that they:

.1 bear responsibility for the correctness of procedure application and the obtained value of the verified gross mass;
.2 carries out the container weighing to comply with CSC;
.3 will agree with RS introducing of any amendments to the RS-approved documents.

3 PERIODICAL SURVEYS

3.1 GENERAL

3.1.1 The responsibility for submission of containers for surveys within the prescribed terms and in the stipulated cases, presentation of necessary documents, as well as testing, gauging and inspecting for defects tests with the owner of containers.

3.1.2 The CSC gives the owners of container power to choose survey procedures:

.1 submission of containers to survey with a period of time, refer to 3.2;

.2 submission of containers for survey in accordance with approved ACEP program, refer to 3.3.

3.1.3 The responsibility for maintaining containers in proper condition for safe operation thereof rests with the owner of containers.

3.1.4 At time intervals between prescribed surveys the owner shall ensure the necessary checks and examinations to reveal possible defects and faults, availability of marking of the containers and its compliance with the requirements of CSC, IMDG Code and the requirements of the Rules for the Manufacture of Containers.

3.1.5 If an approved container has ceased to comply with the CSC provisions and the requirements of the Rules for the Manufacture of Containers due to structural or manufacturing defects revealed during service, and such occurrence is observed on a considerable number of containers out of the approved series, the Register may cancel the documents issued.

3.1.6 In case of loss of a CSC and/or CCC Plate, approval of an individual container for further service is subject to special consideration by the Register in each particular case.

3.2 SURVEY OF CONTAINERS

3.2.1 The Register performs:

.1 first special survey — not later than 60 months (5 years) from the date of a container manufacture.

N o t e . 1. Date (month, year) prior to it is necessary to carry out the first survey is indicated on CSC Table affixed to container upon manufacture thereof.

2. For tank containers for transportation of dangerous cargo the first periodical survey shall be carried out within the period specified in 3.4;

.2 further periodical surveys — with an interval not exceeding 30 months (2,5 years).

N o t e . Date (month, year) prior to which a periodical survey shall be conducted is indicated on CSC Table;

.3 occasional surveys to be held on application from owners of the containers or other organizations concerned.

3.2.2 Special surveys of the containers include:

.1 external examination including examination of the roof, base and internal volume of an empty container as well as examination of marking.

N o t e . If permissible load during the container stacking is less than 192000 kg of the force when testing for transverse racking is less than 150 kN, the marking of container type and size of container shall be applied/changed in compliance with ISO 6346;

.2 examination with provisions of access for examination, opening-up or dismantling of machinery (units), thermal insulation etc. at the discretion of the Register surveyor, depending on technical condition of the container;

.3 tests and inspections at the discretion of the Register inspector, depending on technical condition of the container.

3.3 CONTINUOUS SURVEY PROGRAM (ACEP)

3.3.1 Containers shall be surveyed under ACEP by means of:

.1 complete surveys which constitute surveys carried out upon major repair, updating, modification or taking on/off lease;

.2 examinations in service, which are considered as re-inspections performed with the aim to reveal any damage or wear which can necessitate corrective measures.

3.3.2 The containers, examination of which shall be made under ACEP, shall be subjected to complete survey in cases specified in 3.3.1.1, but at any case not less than once every 30 months.

3.3.3 The ACEP Program to be submitted to Register Head Office for approval, shall contain the following information:

.1 number of containers included in the program;

.2 numbers of Approval Certificates according to CSC provisions for each type of container design;

.3 information on technical characteristics of container models included in the program;

.4 a system for recording and updating the identification numbers of all containers included in the program;

.5 conditions and procedure for adding containers into an already approved program;

.6 methods, scope and criteria of the condition assessment being used during the container survey;

.7 qualifications of the personnel authorized to carry out surveys;

.8 the nature and periodicity of inspections;

.9 terms of surveys and measures to ensure container surveys at least once per 30 months (2,5 years);

.10 information on control system of the survey terms;

.11 measures that shall be taken by the owners in respect of containers which cease to comply with the CSC requirements and the requirements of the Rules;

.12 system of keeping records and documents that shall capture:

.12.1 the owner's unique serial number of the container;

.12.2 the date of the container manufacture;

.12.3 the date on which the survey was carried out;

.12.4 a competent person who carried out the survey;

.12.5 the name of the organizations and firms where the container survey and/or technical maintenance (repair) will be carried out;

.13 the survey results.

3.3.4 If satisfied with the results of consideration of the submitted ACEP Program, the Register shall notify the owner and other concerned parties on the approval of the Program.

3.3.5 A sign containing letters with the name of country and the number of approved ACEP program shall be marked on the CSC Plate or in immediate proximity thereof to indicate that the container is operated in conformity with the RS-approved program.

3.3.6 The approval of ACEP program is valid for not more than 10 years. The program shall be confirmed at least once per 30 months (2.5 years).

3.3.7 ACEP program does not cover tank containers.

3.4 SURVEY OF TANK CONTAINERS

3.4.1 General.

3.4.1.1 The scope and frequency of surveys of tank containers shall comply with the requirements of Table 3.4.1.1.

Table 3.4.1.1

The scope and frequency of tank container surveys

Interval	RS Rules paras	Tests/survey			
		Visual examination of tank container, including a shell	Visual examination, testing, functional test of service equipment and fittings	Tightness tests	Strength tests
Special, with an interval of 30 months (2.5 years)[1, 2]	3.4.2	+	+	+	–
Special, with an interval of 60 months (5 years)[2]	3.4.3	+	+	+	+[3]
After repair or modernization	3.4.2 and 3.4.3	+	Up to discretion of RS surveyor based on the damage degree		

[1] Where the term of the scheduled survey exceeds 3 months from the prescribed date, a survey in the scope of 5 years shall be conducted.
[2] Where a survey is conducted at an early date, the date of the next special survey shall be changed.
[3] For tank containers UN T75 strength tests of shell is not required.

N o t e . It is permitted to conduct occasional surveys in compliance with the requirements of paras 6.7.2.19.7, 6.7.3.15.7 and 6.7.4.14.7 of the IMDG Code.

3.4.1.2 Tank container shall not be filled and submitted for carriage upon expiration of the last 5-year or 2,5-year periodical survey and testing in compliance with the requirements of the IMDG Code and Table 3.4.1.1.

However, tank container being filled prior to the expiry date of the last periodical survey and testing may be transported during a period no exceeding three months upon expiry date of the last periodical survey or survey. Moreover, tank container may be transported upon expiry of the last periodical testing and survey:

.1 after emptying but prior to cleaning for the purposes of conducting the next required testing and survey prior to the re-filling; as well as

.2 where not otherwise approved by a competent body, for the period not exceeding six months upon expiry of the last periodical testing or survey in order to permit transportation of dangerous goods for proper utilization or upcycling. A reference to this permit shall be indicated in a shipping document.

Except for the cases provided by this para, tank containers, for which the dates of the scheduled 5-year or 2,5-year survey are missed, may be filled and permitted to transportation only in case of conducting a survey in a 5-year scope.

3.4.1.3 Periodical surveys of tank containers shall be performed on RS-inspected or recognized firms the requirements for which are specified in Section 2.

The possibility of conducting periodical survey of tank container at the firms uninspected or unrecognized firms shall be determined by RS in each particular case.

3.4.1.4 Tank containers prepared for survey by the RS surveyor shall be cleaned from inside, degassed and ventilated, as well as decontaminated and cleaned from the residues of previously transported goods from the outside (fitting compartment and shutoff safety valves).

Prior to the survey, a documents issued by a cleaning station, as well as a valid document on gas analysis in the shell, containing a conclusion on the possibility of conducting work inside the shell signed by a specialist who performed air analysis, shall be submitted to the surveyor.

Testing of tank containers shall be performed in compliance with the RS-approved program and testing procedure.

3.4.1.5 Criteria of safe operation of containers set forth in 4.3.5 and 4.3.6 are minimum ones for periodical surveys.

3.4.2 Surveys every 30 months (2,5 years) shall include the following.

3.4.2.1 Assessment of technical conditions all bearing structural elements of tank container (fittings, side rails and cross-members, corner posts, elements attaching a shell to a framework), as well as welding joints.

In particular cases, depending on technical condition pf tank container, RS may require to perform non-destructive testing of weld agreed with RS.

N o t e . The requirements to non-destructive testing of welds are specified in 5.10 of the Rules for Technical Supervision during Manufacture of Containers, Materials and Products for Containers.

3.4.2.2 Assessment of technical condition of shell.

.1 Where the following is detected:

.1.1 cuts, cracks, shears or;

.1.2 dents and bends over 10 mm in depth or;

.1.3 sharp dents or;

.1.4 scores, improper grinding in excess of 0,1 mm, tool marks or;

.1.5 grinding by tools with a coarse grit below 120 or;

.1.6 improper repair or any other damage and/or defects, including corrosion which could make tank container unsafe for transportation, a shell of tank container shall be checked for residual thickness and/or be subject to non-destructive testing.

.2 Where during an examination a corrosion of shell material is detected, the nature and dimensions of which may result in reduction of the shell wall below the minimum value required by the design of tank container, RS may require to perform a check of residual thickness.

When the detected corrosion results in reduction of the shell wall below the minimum value required by the design of tank container, the renewal shall be performed. The repair scope and technology shall be agreed with RS.

Tank containers aged over 20 years shall be subjected to RTM inspection at least once in 5 years.

.3 It is permitted to perform RTM with the involvement of test laboratories, which scope of accreditation allows to perform such work or the personnel of the firm where the survey is conducted, when the compliance with the requirements of 2.3.4 is confirmed.

.4 RS may require to perform non-destructive testing of the shell welds depending on their condition, as well as a type and nature of damage, by a method and in the scope agreed with RS.

.5 RS may require partial or complete dismantling of tank container jackets and insulating material of tank container (except for tank containers UN T75) in case any doubts of possible damage of the shell arise during an external or internal examination.

.6 A jacket and insulating material of tank containers UN T75, which are designed with insulation but without vacuum, shall be dismounted within the limits required for reliable estimate of the shell condition.

3.4.2.3 Assessment of lining, where available, shall be made in compliance with the criteria established by the firm (manufacturer).

3.4.2.4 Assessment of condition of running boards and stairs.

Running boards shall be in a satisfactory condition and shall ensure the possibility to perform inspection and tests.

3.4.2.5 Assessment of technical condition and completeness of installed service equipment, fittings, devices for producing and maintaining of pressure and temperature, meanwhile:

.1 all stop valves and vents shall be checked for operability. In case of any doubts about proper functioning of any equipment, it shall be dismantled and checked;

.2 all safety valves shall be dismantled and inspected. The safety valve turn-on pressure shall be inspected for compliance with the value specified on valve marking keeping due note of pressure required by the international and national normative documents, as well as 2.3.2.2 and 2.3.3.2, Part IV "Tank Containers" of the Rules for the Manufacture of Containers;

.3 the frangible disks shall be visually inspected for integrity, availability of marking and compliance of the breakdown pressure specified on a tag to the pressure required in accordance with 2.3.2.6, Part IV "Tank Containers" of the Rules for the Manufacture of Containers, as well as the international and national normative documents. Membranes without labels or non-legible information on them shall be replaced.

In case of reasonable doubts in the integrity, the membranes shall be bench-tested with the pressure of 0,5 of the container working pressure;

.4 replaceable instrumentation shall be verified and have valid documents and marking.

A manometer for monitoring (indication) of integrity of a membrane placed in series with safety valves is an exception;

.5 All lacking or loose bolts or nuts in any flange connection or on blind flanged shall be installed and tightened;

.6 Remote closing arrangements of locking valves and self-closing check valves shall be tested in operation for checking their working order.

3.4.2.6 Conducting of leakproofness tests in accordance with 3.7.8, Part IV "Tank Containers" of the Rules for the Manufacture of Containers, without removal of insulation and protective coating;

3.4.2.7 Inspection of marking:

.1 check of availability of all required plates, correctness and readability of notes thereon.

N o t e . Tables: CSC with the tank data and CCC, in case of their loss, shall be renewed with regard the applicable requirements of Section 4, Part I "Basic Requirements", 4.3, Part IV "Tank containers" of the Rules for the Manufacture of Containers and 3.1 of the Rules for the Approval of Containers for the Transport of Goods under Customs Seals;

.2 check of compliance of tank container marking with the requirements of Section 4, Part IV "Tank containers" of the Rules for the Manufacture of Container, as well as the requirements of 3.2.2.1;

.3 in case of satisfactory survey results, the plates shall be marked in compliance with Section 5.

3.4.3 Surveys every 60 months (5 years) shall include the following.

3.4.3.1 Assessment of technical supervision of tank container and its fittings in compliance with 3.4.2.1 — 3.4.2.5.

3.4.3.2 Conducting of a shell strength tests (except for UN T75 tank container) by the pressure indicated on the nameplate with tank data, without removing insulation and protective

coatings, in compliance with 3.7.4, Part IV "Tank containers" of the Rules for the Manufacture of Containers, without removing insulation and protective coatings;

conducting of cooling and heating systems (where available) in compliance with 3.7.9, Part IV "Tank Containers" of the Rules for the Manufacture of Containers, without removing insulation and protective coatings.

3.4.3.2.1 Prior to hydraulic test of a tank the safety and vacuum valves shall be removed and replaced by hermetic plugs of the relevant design and strength. For the purposes of strength tests, a manhole gasket may be replaced by a rubber one. A tank shall remain under pressure for at least 30 min.

3.4.3.2.2 Upon agreement with RS, it is permissible to replace hydraulic tests of the tank by other testing methods according to the Register approved test program.

3.4.3.2.3 Absence of a leak and pressure drop in a tank, its fittings and refrigerating or heating systems (where available) shall be checked during the test.

3.4.3.3 Conducting of leakproofness tests based on the satisfactory results of strength test of the tank in accordance with 3.4.2.6.

Prior to the leakproofness test, the sealings of material required for operation shall be fitted to all connections between the tank and equipment.

3.4.3.4 Check of marking in compliance with 3.4.2.7.

3.5 SURVEY OF TANK CONTAINERS WITH FIBER-REINFORCED PLASTICS

3.5.1 General.

3.5.1.1 General requirements for conducting of survey of tank containers with fiber-reinforced materials (FRP) are stated in 3.4.1.

3.5.1.2 Requirements and definitions of Part VIII "Tank Containers with Fiber-Reinforced Plastics (FRP) Shell" of the Rules for the Manufacture of Containers and the requirements of 3.4 of these Rules shall apply to tank containers with FRP shell.

3.5.2 Survey every 2.5 years shall include epy the following.

3.5.2.1 The extent of survey of tank containers with FRP shell, besides the requirements specified in 3.4.2 (except for 3.4.2.2.2 and 3.4.2.2.4), shall include the following:

.1 survey of tank with FRP shell:

.1.1 technical condition of FRP shell shall be determined as per the procedures approved by the Register;

.1.2 determining of the technical condition of FRP shell shall include checking of the condition of a chemically resistant layer, structural layer, and fireproof coating for compliance with the criteria specified in Table 3.5.2.1.1.2;

Table 3.5.2.1.1.2

List of possible operational damages of FRP shell

Item No.	Type of damages	Criterion
	Chemically resistant layer	
1	Non-through thickness cracks on the chemically resistant layer surface	Max. 0,5 mm in depth; max. 0,05 mm in width; max. 100 mm in length; total length max. 1 m
2	Non-through thickness cracks on a chemically resistant layer in the area of jointing of cylindrical part and heads	Not allowed
3	Through cracks on chemically resistant layer	Not allowed
4	Hairlike cracks	Allowed
5	Change of color tones of chemically resistant layer	Allowed
	Fireproof coating	
6	Non-integrity of fireproof coating	Baring of structural layer on the area max. 100 cm²

Item No.	Type of damages	Criterion
7	Blistering of fireproof coating	Not more than 500 cm² (without baring of structural layers)
8	Change of color tones of fireproof coating	Allowed
9	Notches, scratches, attritions of fireproof coating without baring of structural layers	Total reduced area max. 1,0 m²
Structural layers		
10	Non-through cracks, delaminations or cracks in structural layers	Maximum linear dimension 100 mm, depth of crack max. 0,1 of structural shell thickness
11	Non-tightness in the area of shut-off valves and safety devices	Not allowed

.1.3 technical condition of FRP shell shall be determined in production areas or outdoors at an ambient temperature, which is not lower than 5 °C with no precipitations and with observance of the provisions of EN 13018;

.1.4 non-destructive testing of FRP shell shall be carried out in case of operational damages mentioned in the technical documentation of the tank container manufacturer using the methods approved by the Register;

.1.5 measurement of surface resistance and resistance to discharge to ground of each manufactured tank in accordance with the procedure approved by the Register.

3.5.3 Survey every 5 years.

3.5.3.1 In addition to survey specified in 3.5.2, the inspections and tests in accordance with the requirements of 3.4.3 shall be carried out.

3.5.4 Occasional surveys.

3.5.4.1 Occasional surveys shall be carried out in accordance with the requirements of 3.5.3 in case of damage of a tank container with FRP shell and after its repair.

3.5.5 Requirements for technical supervision of repair of tank containers with FRP shell.

3.5.5.1 Repair of tanks with FRP shell shall be carried out in accordance with the Repair Manual approved by the Register.

3.5.5.2 Materials used for repair of FRP shells shall meet the requirements of 2.2.5 and 2.2.6, Part VIII "Tank Containers with Fiber-Reinforced Plastics (FRP) Shell" of the Rules for the Manufacture of Containers.

3.5.5.3 Tank container with FRP shell with detected damages shall be sent to repair after reporting that confirms the necessity of the repair and is stipulated by the method of establishing of the technical state of the tank container approved by the Register.

3.5.5.4 FRP shell shall be repaired at a specialized repair firm according to the technology agreed with the firm (manufacturer) and approved by the Register or at the firm (manufacturer's). Upon completion of FRP shell repair, the Register shall survey the shell to determine the possibility of its further operation.

3.6 SURVEY OF THERMAL CONTAINERS

3.6.1 The scope of survey of thermal containers shall comply with the requirements of 3.2

Additionally, in accordance with the application of the owner or lessee, a survey of the unit operation may be carried out in the scope agreed with the owner or lessee.

3.6.2 Criteria for safe operation of containers set forth in 4.3.5 are considered as minimum requirements for survey for compliance with these Rules and the CSC.

3.6.3 In case of satisfactory survey results, the CSC plate shall be marked in accordance with Section 5.

3.7 SURVEY OF OFFSHORE CONTAINERS

3.7.1 The scope and frequency of surveys of offshore containers shall comply with the requirements of Table 3.7.1.

Table 3.7.1

The scope and frequency of offshore container surveys

Interval	Tests/survey			
	Lifting test[1]	**Non-destructive testing of lifting eyes**	**Visual examination**	**Branding on inspection plate[2]**
Special surveys at interval not exceeding 12 months (1 year)	Up to discretion of RS surveyor	Up to discretion of RS surveyor	+[3]	T or VN or V
Special surveys at interval not exceeding 48 months (4 years)	Up to discretion of RS surveyor	+	+	T or VN
After major repair or modernization[4]	+	+	+	T

[1] The procedure of lifting test of offshore containers shall be in accordance with 8.1, 8.2.1 and 8.2.2, Part VII "Offshore Containers" of the Rules for the Manufacture of Containers. No residual deformation preventing use of a container for its purpose shall remain after testing.
[2] T means the performance of visual examination, load test and non-destructive testing;
VN – marking denoting visual examination and non-destructive testing;
V means the performance of visual examination only.
[3] + — is performed.
[4] The major repair or modernization means repair or modernization of members of container affecting its structural strength.

3.7.2 The scope of visual inspection shall comply with that specified in 3.2.2. Special attention shall be paid to condition of welds of pad eyes and members impacting the structural strength of the container.

3.7.3 Non-destructive testing of pad eye welds and mating elements shall be carried out by magnetic particle inspection check, dye penetrant inspection or eddy current method (considering the requirements of 8.3 of ISO 10855-3).

The Register may require diagnostic examination by other methods. The requirements for nondestructive testing and quality assessment of welded joints are specified in 5.10.3 of the Rules for Technical Supervision during Manufacture of Containers, Materials and Products for Containers.

N o t e . Non-destructive testing report shall be attached to the container survey report.

3.7.4 Offshore tank containers intended for the transport of dangerous goods shall in addition pass surveys listed in 3.4.

3.7.5 The survey scope and frequency of the lifting sets of offshore containers shall meet the requirements of Table 3.7.5.

Table 3.7.5

The survey scope and frequency of the lifting sets of offshore containers

Interval	Application	Tests/survey			
		Load test	**Non-destructive testing[1]**	**Visual examination**	**Branding of identification tag**
Special surveys at interval not exceeding 12 months	Complete lifting set	–	–	+	V

Interval	Application	Tests/survey			
		Load test	**Non-destructive testing[1]**	**Visual examination**	**Branding of identification tag**
Special surveys at interval not exceeding 48 months	Sling components and joining links	Load test or non-destructive testing		+	T or VN
	Wire legs	–	–	+	–
	Chain sling legs	Load test or non-destructive testing[2]		+	T or VN
	Shackles	–	–	+	–
After substantial repair or modernization	Complete lifting set	+[3]	+[3]	+	T

[1] The magnetic particle method is used for the non-destructive testing of the lifting set items but steel wire ropes.
[2] Non-destructive testing shall be carried out at end links of each sling +10 % of a sling length. The location of these 10 % shall be selected based on visual examination.
[3] In compliance with the applicable standards including EN 818-6.
T means the performance of visual examination, load test and non-destructive testing.
VN means the performance of visual examination and non-destructive testing.
V means the performance of visual examination only.

3.7.6 The Register may require the diagnostics performance by other methods as well as carrying out additional surveys and tests.

3.7.7 The survey of chain and wire lifting sets and members thereof shall be carried out in accordance with the applicable requirements of EN 818-6 and EN 13414-2 standards respectively.

3.7.7.1 The following defects of wire rope slings are prohibited:

.1 at any point of its length equal to ten diameters, the number of broken wires is 5 % or above of the total number of wires in the rope;

.2 a strand is broken;

.3 breaks of external wires 4 — 6 — 16 pcs at lection with a length of 3*d* — 6*d* — 30*d* accordingly;

.4 the availability of corrosion, particularly of the internal corrosion;

.5 reduction of the wire rope diameter as a result of surface abrasion or corrosion by 7 % and more, as compared with a nominal value;

.6 reduction of a wire rope diameter by 10 % of the nominal value due to core damage (internal wear, cuddling, tearing up, etc);

.7 increase of diameter by 7 %;

.8 deformation of thimbles or their wear with reducing the initial section by more than 15 %;

.9 more than one broken wire immediately adjacent to a compressed metal ferrule (pressed clamp/bush) or end fitting;

.10 cracks on a pressed clamp (liner);

.11 shifting of a wire rope in the pressed clamp (liner);

.12 difference of sling lengths due to residual elongation by more than 3 %;

.13 birdcaging (refer to Fig. 3.7.7.1.13);

Fig. 3.7.7.1.13
Birdcaging.

.14 core protrusion (refer to Fig. 3.7.7.1.14);

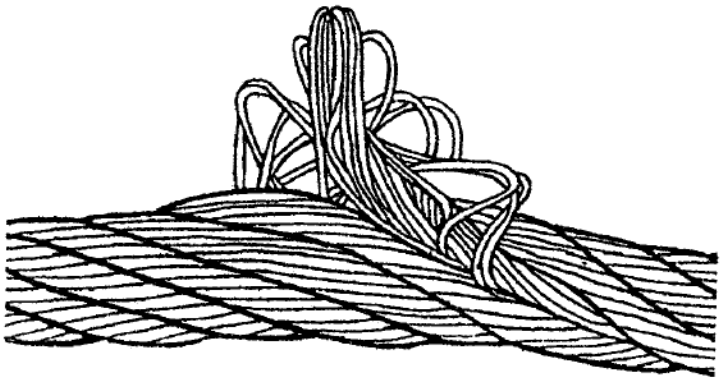

Fig. 3.7.7.1.14
Core protrusion

.15 local increase/reduction of a wire rope diameter (refer to Fig. 3.7.7.1.15);

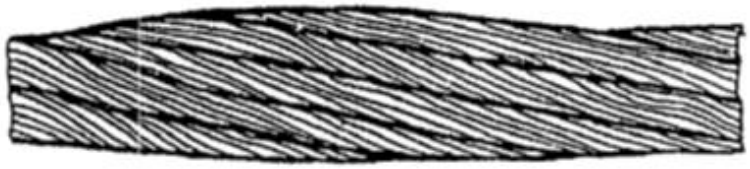

Fig. 3.7.7.1.15
Local increase/decrease of a rope diameter

.16 the availability of separated areas (refer to Fig. 3.7.7.1.16);

Fig. 3.7.7.1.16
The availability of separated areas

.17 wire squeezing-out or delamination of strands (refer to Fig. 3.7.7.1.17);

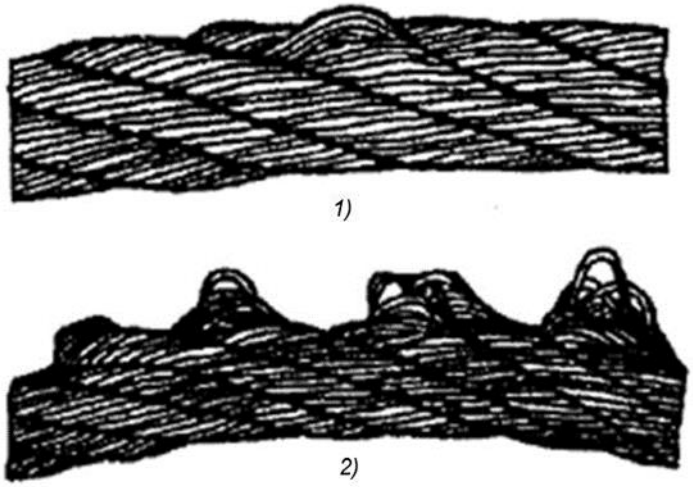

Fig. 3.7.7.1.17
Wire squeezing-out or delamination of strands:
1) — one strand; *2)* — in several strands

.18 twisting (refer to Fig. 3.7.7.1.18);

Fig. 3.7.7.1.18
Twisting

.19 kinks, bends (refer to Fig. 3.7.7.1.19);

Fig. 3.7.7.1.19
Kinks, bends.

.20 damage as a result of temperature exposure or electrical arc discharge (to be determined based on the availability of soot, burns, changes of color);

.21 residual undulation (refer to Fig. 3.7.7.1.21) with the ratio of $\frac{d_u}{d_w} > 1{,}33$ in this case the length of the examined area H_u the examined area shall not exceed 25*d*;

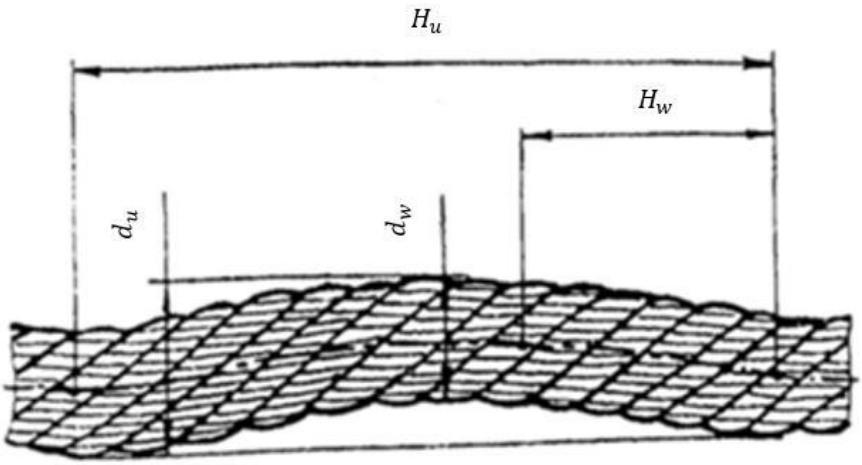

Fig. 3.7.7.1.21
Residual undulation

.22 thermal damage. Any changes of the metal color caused by exposure to high temperatures (welding signs).

3.7.7.2 The following defects of rings and joints are prohibited:

.1 lack of marking;

.2 availability of crack of any sizes and location;

.3 extension of chain links for more than 3 % of the initial size (refer to Fig. 3.7.7.2.3-1) (the length is determined by measuring a chain part consisting of five links per every 2 m of the ling, the length of a sling part is equal to the production of a chain pitch to link number) and at reduction of the chain links diameter in placed of intersection/contact of the chain link due to wear above 10 % (refer to Fig. 3.7.7.2.3-2);

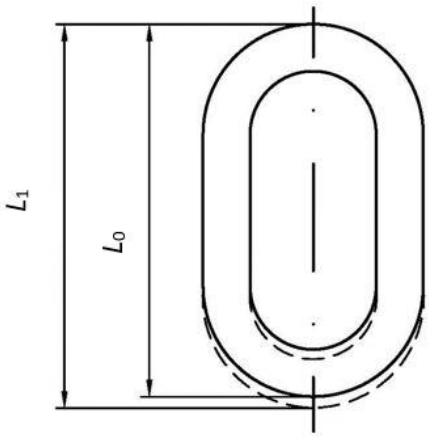

Fig. 3.7.7.2.3-1
Increasing a chain link:
$L_1 \leq L_0 + 3\% L_0$
L_0 — initial link length, mm;
L_1 — increased link length, mm

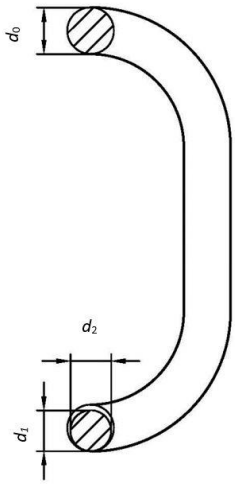

Fig. 3.7.7.2.3-2
Reducing of a chain link diameter:
$\frac{d_1+d_2}{2} \geq 0{,}9d_0$; d_0 — initial diameter, mm; d_1, d_2 — actual section diameters of a link, measured in orthogonally related directions, mm

.4 deformation, defects of upper/lower links/connecting rings, cuts, notches, dents, excessive corrosion, changing of color at heating, bent or distorted links.

3.7.7.3 The following defects of shackles are prohibited:

.1 cracks and deformations;

.2 bending and excessive wear in the of a thimble contact point;

.3 lack of free rotation of a pin in the shackle.

3.7.8 During survey, it is necessary to make sure that the marking plate and the information thereon corresponds with the technical characteristics of the presented lifting set it is attached to. The slings of the lifting set shall be attached to the container and the fore runner, if any, without twisting.

3.7.9 During testing of chain sling legs of lifting sets, a load $2{,}5 \times WLL \pm 2\ \%$ shall be statically applied to each sling. The minimum time for exposure under load – 5 min. Upon completion of the testing, the visual and measuring examination and, if necessary, nondestructive magnetic particle testing shall be carried out in the scope agreed with the Register.

N o t e . WLL for testing of each sling of the lifting set shall be assumed according to EN 818-4 (Table 3) for a "single sling leg" depending on the chain caliber indicated on the lifting set marking plate.

3.7.10 Testing of the rings and connecting links of chain and wire lifting sets by test load is carried out according to the requirements of standards in compliance with which the products are made. The minimum time for exposure under load — 5 min. Upon completion of the testing, the visual and measuring examination and, if necessary, nondestructive magnetic particle testing shall be carried out in the scope agreed with the Register.

3.7.11 No permanent deformations and damages preventing the safe use of the lifting set and its components according to their purpose shall be detected after testing.

3.7.12 In case of satisfactory results of the survey, the marking shall be applied on the lifting set in compliance with Section 5.

4 REPAIR AND MODERNIZATION

4.1 GENERAL

4.1.1 Containers which sustained damages during operation involving impairment of strength performance of bearing structures shall be repaired under the RS technical supervision at RS-inspected or recognized firms.

The possibility of conducting periodical survey of container at the uninspected or unrecognized firms shall be determined by RS in each particular case.

4.1.2 Container modernization shall be conducted at the firm (manufacturer) or on the RS-inspected or recognized firms.

4.1.3 The requirements to survey or recognition of the firms are stated in Section 2.

4.2 TECHNICAL DOCUMENTATION

4.2.1 Repair of container members listed in 4.3 shall be performed in compliance with RS-approved technical documentation.

4.2.2 The technical documentation submitted for repairs shall contain:

.1 description of repair procedure that may be based on the national and international normative documents agreed or recognized by the Register;

.2 necessary drawings;

.3 the table of welding procedures and welding materials, and in the case of repair of tank containers intended for the transport of pressurized goods, Welding Procedure Approval Test Certificate of a due form;

.4 description of welding quality control methods.

4.2.3 A volume of technical documentation for container modernization is agreed with RS in each particular case based on the level of modernization.

4.3 DAMAGES

4.3.1 Damages which require the following may be referred to damages related to violation of strength characteristics of bearing structures:

.1 replacement of one or more corner fittings;

.2 full or partial replacement of primary structure parts, (corner posts, side rails, cross-members);

.3 full or partial (more than 1/3 area) replacement of side and end panels, roof panels;

.4 full replacement of floor.

4.3.2 In addition to damages listed in 4.3.1, the following damages and malfunctions of the thermal containers shall be repaired under the Register technical supervision:

.1 damage of insulation;

.2 damage of cold (heat) generation means;

.3 impairing of weathertightness;

.4 damage of drainage system;

.5 damage of closures;

.6 malfunction of control, protection and control devices;

.7 malfunction of electrical equipment.

4.3.3 In addition to damages listed in 4.3.1, the following damages of tank containers shall be remedied under technical supervision of the Register:

.1 damage of tank shell and heads;

.2 damage of supports and fastenings;

.3 damage of safety devices;
.4 damage of pipes and fittings;
.5 damage of monitoring devices;
.6 damage of cold (heat) generation means, if any;
.7 damage of thermal insulation, if any.

4.3.4 In addition to damages listed in 4.3.1, the following damages of offshore containers and lifting sets shall be repaired under the Register technical supervision:
.1 damages of bearing structure;
.2 damages of pad eyes;
.3 calculation of lifting sets for offshore containers.

N o t e . In respect to offshore tank containers and offshore thermal containers one shall be also guided by the provisions of 4.3.2 and 4.3.3.

4.3.5 As criteria for defining the possibility of safe operation of damaged containers, the Register recommends to use those listed below:
.1 for corner fittings:
.1.1 dimensions of corner fitting apertures shall not exceed ISO tolerances;
.1.2 corner fitting shall have no cracks and notches and shall not be detached from structural elements of the container;
.2 for corner posts:
.2.1 depth of a single deformation shall not exceed 25 mm, irrespective of its length and location;
.2.2 with two or more indentations, none of these shall exceed 15 mm in depth; cracks, ruptures and punctures shall be repaired regardless of their size;
.2.3 deformation of corner posts shall not cause the external dimensions of the container change that could exceed ISO tolerance by more than 5 mm;
.2.4 deformation of the rear corner posts shall not render the doors inoperable and impair the watertight integrity;
.3 for top and bottom side rails and cross-members:
.3.1 top side rails and cross-members:
.3.1.1 deformations of top side rails and the front end rails (dents, bendings, etc.) shall not exceed 25 mm in depth;
.3.1.2 deformation of rear top cross-member shall not exceed 35 mm, render the doors inoperable and impair the watertight integrity;
.3.2 bottom side rails:
.3.2.1 deformations on the webs of side rails shall not exceed 50 mm in depth;
.3.3 lower cross-members:
.3.3.1 deformations on a web shall not exceed 50 mm in depth;
.3.3.2 deformation of the rear bottom rails shall not render the doors inoperable or impair the watertight integrity;
.3.3.3 deformation of the cross-member shall not cause the external dimensions of the container to change so as to exceed ISO tolerance by more than 5 mm;
.3.3.4 deformation shall not cause a change in length of diagonals between the corner fitting apertures to exceed the ISO tolerance;
.3.3.5 cracks, ruptures and punctures shall be repaired, irrespective of their size;
.4 for walls and roof:
.4.1 front and side walls:
.4.1.1 no deformation, such as dents, bends, etc. on a plane portion of the side and front wall where the marking shall be applied, or on internal or external corrugations, shall exceed 35 mm;

.4.1.2 any two deformations existing on the opposite walls and facing one another shall not cause the distance between the walls to decrease by more than 50 mm against the constructional dimension;

.4.1.3 no deformation involving the length or height of a wall shall lead to the reduction of internal dimensions by more than 50 mm;

.4.1.4 any deformation of the side walls shall not exceed ISO tolerance by more than 10 mm;

.4.1.5 any deformation of the front wall — by more than 5 mm;

.4.1.6 any deformation which may result in sharp edges liable to cause damage to cargo shall be eliminated;

.4.1.7 cracks and punctures, irrespective of their dimensions, shall be repaired;

.4.2 roof:

.4.2.1 deformation shall not exceed 35 mm in depth; no deformation involving the length or width of a roof shall lead to the reduction of internal dimensions by more than 50 mm;

.4.2.2 punctures, cracks, ruptures shall be repaired, irrespective of their dimensions;

.5 for floor decking:

.5.1 cracks and cleavings shall not exceed 15 mm in depth, irrespective of the damage length, or shall not exceed 5 mm when the damage width is more than 150 mm;

.5.2 difference in height between the faces of the adjoining boards shall not exceed 5 mm;

.5.3 any through holes, spallings of material, splittings shall be repaired;

.5.4 floor boardings shall be dry, clean and shall not emit specific odour;

.6 for bottom cross-members:

.6.1 no deformation on a web of cross-members, or on the top plate of fork lift pockets and gooseneck tunnel shall exceed 50 mm;

.6.2 deformations on a top flange shall not intrude more than 50 mm into the container;

.6.3 clearance between the top face plate of the cross-member and the floor boardings shall not exceed 10 mm;

.6.4 in no instance shall the deformations on the bottom flange of cross-members, fork lift pockets and gooseneck tunnel project below the plane 1 mm above the plane of the bottom faces of bottom corner fittings;

.6.5 any cracks, notches, ruptures shall be repaired;

.6.6 no deformation of fork lift pockets and gooseneck tunnel shall cause their dimensions to change so as to exceed ISO tolerances by more than 10 mm;

.7 for doors:

.7.1 no deformation of the door panel shall exceed 35 mm;

.7.2 no deformation shall render the doors inoperable and shall cause the ISO tolerance for external dimensions to be exceeded by more than 5 mm;

.7.3 doors shall not have cracks, punctures and other damages which may entail failure of the container waterproofness;

.8 for door lock:

.8.1 broken or notched cams, cam retainers, hinges, hinge bolts, door locking bars shall not be allowed;

.8.2 bent door locking bars and door locking handles preventing the door from being properly opened or closed, shall be repaired or replaced;

.9 for other damages:

.9.1 partial or complete lack of marking shall not be allowed.

N o t e . The Register may approve the use of other international or national regulations and guidelines based on the CSC and CCC provisions and submitted by the owners of containers, repair firms or surveying companies. The criteria determining the safe operation of dry fright containers and related to their framework apply to the frame of tank containers.

4.3.6 In addition to the requirements of 4.3.5, RS recommends to use the following criteria defining possibility of safe use of tank containers:

.1 for the tank container in general:

.1.1 absence of any damage leading to impossibility of the use of tank container for the purposes it is intended for;

.1.2 absence of any deformation leading to excess of ISO tolerances for outer dimensions by more than 5 mm for end surfaces and by 10 mm — for side surfaces;

.2 for the framework and elements attaching a shell to a framework:

.2.1 cracks, cuts, ruptures, punctures, etc. shall be repaired regardless of their size;

.2.2 when the bottom rear end rail is deformed the gap between a rail and securing device of the bottom discharge shall not be less than 5 mm;

.2.3 deformation of the diagonal braces in side, end, bottom and top surfaces of a frame shall not exceed 20 mm;

.2.4 a value of deformation of the elements attaching a shell to a framework shall not exceed 13 mm;

.2.5 corrosion of the framework member and welds shall not result in reduction of strength of a tank container;

.3 for the vessel (made of metal materials):

.3.1 cracks, ruptures, punctures, etc. shall be eliminated regardless of their size;

.3.2 corrosion of vessel material or welds shall not result in reduction of the tank shell thickness below the minimum value required.

N o t e . The minimum value required is determined basing on the requirements of the relevant sections of Chapter 6.7 of the IMDG Code regarding the type and design of the tank container;

.3.3 depth of scratches, grooves, machining traces shall not exceed 5 % of the vessel metal thickness;

.3.4 no shell repairs made by fitting patches on the inner surface;

.3.5 deformation of the shell walls within the upper third of the tank cross-section shall not exceed 6 mm;

.3.6 deformation of the shell walls within the upper third of the tank cross-section shall not exceed 10 mm;

.4 for thermal insulation and its coating:

.4.1 cracks, cuts, ruptures, punctures, etc. shall be repaired regardless of their size;

.4.2 delamination of thermal insulation covering in the place of butts, joints, etc., loss of components and fastenings shall be eliminated.

4.3.7 Upon completion of the repair, containers with the CCC Plates shall comply with requirements of the Rules for the Approval of Containers for the Transport of Goods Under Customs Seals.

4.3.8 Materials used for repairing containers shall have characteristics equivalent to those of the materials used for the manufacture of containers or exceeding them. Material used for repairing shells of tank containers shall have a document confirming technical supervision of the Register.

4.3.9 Tank container shells shall be repaired keeping due consideration to calculation standards for pressure vessels used for the design of the tank container.

4.3.10 Repair of container members listed in 4.3.1 — 4.3.4 shall be performed by welders certified by the Register and having the Welder Approval Test Certificate of a due form.

4.4 CHECKS AND TESTS

4.4.1 Upon the repair results of mixed cargo containers, the following shall be performed:

.1 examination to assure that the repair has been properly performed;
.2 examination to assure that the Customs requirements are complied with;
.3 inspection of the prescribed dimensions and marking of the container;
.4 weathertightness testings.

N o t e . In particular cases, the Register may require additional tests.

4.4.2 For other type of container it may be required to perform additional examinations and tests in the scope established by RS in each particular case.

5 MARKING AND BRANDING

5.1 GENERAL

5.1.1 After performing the surveys according to the CSC, the stamp of the Register of approved type and date (month, year) of subsequent survey shall be marked on the CSC Plate or as close thereto as possible. The date may be also marked on the sticker of the approved type without RS branding.

5.1.2 Following the survey of tank containers, the Register brand of approved type shall be put in the appropriate column of the identification plate with tank data, and the date (month and year), test pressure and the applicable units of measurement shall be specified.

N o t e . On identification plates of tank containers manufactured in accordance with the Rules for the Manufacture of Containers, issued before 2003 without taking into consideration the subsequent amendments, indication of the type of survey and test pressure is not required.

5.1.3 On the results of container survey under ACEP, the availability of a number of the approved ACEP program shall be checked on CSC Table, in this case no RS stamp and a survey date shall apply.

5.1.4 Marking of the container shall comply with the requirements of these Rules, Rules for the Manufacture of Containers and Rules for the Approval of Containers for the Transport of Goods under Customs Seals.

5.1.5 Containers with dangerous goods or toxic atmosphere inside, in addition to marking according to 5.1.4 shall bear signs in conformity with the applicable rules for the carriage of dangerous goods.

5.1.6 After survey of offshore containers the stamp of the Register of approved type and date (in YYYY.MM.DD format) of the performed survey and marks in accordance with Table 3.7.1 shall be marked on the Inspection Plate.

N o t e . Offshore tank containers intended for the transport of dangerous goods shall be additionally marked in accordance with 5.1.2.

5.1.7 According to the results of the lifting sets of offshore containers survey, the Register brand of approved type shall be put in the first column of the identification plate of the lifting set (refer to 9.7.6 and 9.7.7, Part VII "Offshore Containers" of the Rules for the Manufacture of Containers), and the date of the survey conducted in format YY.MM.DD and the marks according to Table 3.7.5 shall be specified.

N o t e . Where the lifting set shackles were replaced, the appropriate alterations shall be entered in the identification plate or the latter shall be replaced.

Russian Maritime Register of Shipping

General Regulations for the Technical Supervision of Containers
Rules for the Manufacture of Containers
Rules for the Approval of Containers for the Transport of Goods under Customs Seal
Rules for Technical Supervision during Manufacture of Containers
Rules for Technical Supervision of Containers in Service

FAI "Russian Maritime Register of Shipping"
8, Dvortsovaya Naberezhnaya,
191186, St. Petersburg,
Russian Federation
www.rs-class.org/en/