RUSSIAN MARITIME REGISTER OF SHIPPING

CIRCULAR LETTER	No. 314-54-1089c	of	29.12. 2017

Re:

amendments to the Rules for Technical Supervision During Construction of Ships and Manufacture of Materials and Products for Ships, 2017, ND No. 2-020101-040-E in connection with coming into force of the IACS Unified Requirement (UR) W32 (Sept 2016) "Qualification Scheme for Welders of Hull Structural Steels"

Item of technical supervision:	
Ships under construction	
Implementation	01.01.2018
Valid: till	-
Validity period extended till	-
Cancels / amends / supplements Circular Letter No.	-
Number of pages:	1+22
Appendices:	text of amendments to the Rules for Technical Supervision During Construction of Ships and Manufacture of Materials and Products for Ships, 2017, ND No. 2-020101-040-E

Director General K.G. Palnikov

Amends Rules for Technical Supervision During Construction of Ships and Manufacture of Materials and Products for Ships, 2017, ND No. 2-020101-040-E

We hereby inform that on 1 January 2018 the IACS UR W32 (Sept 2016) "Qualification Scheme for Welders of Hull Structural Steels" will come into force. The IACS UR W32 (Sept 2016) establishes the unified requirements to the approval test procedure for welders of hull structural steels. In connection with the above, the amendments specified in the Appendix to the Circular Letter shall be introduced to the Rules for Technical Supervision During Construction of Ships and Manufacture of Materials and Products for Ships, 2017, ND No. 2-020101-040-E. The specified amendments shall apply to welder certification and issuing Welder Approval Test Certificates (СДС) from 1 January 2018. The IACS UR W32 (Sept 2016) apply during the initial certification of welders and renewal of Welder Approval Test Certificates issued earlier. Welder Approval Test Certificates being issued by the Register before 1 January 2018 shall be reissued in compliance with a new version according to the Appendix to the Circular Letters during their renewal but no later than 31 December 2020. Original UR W32 (Sept 2016) is posted on the RS internal website in the section "External normative documents", as well as on the official IACS website: www.iacs.org.uk

These amendments will be introduced to the Rules for Technical Supervision During Construction of Ships and Manufacture of Materials and Products for Ships, 2017, during their re-publication.

It is necessary to do the following:

1. Apply the provisions of the Circular Letter while conducting the welder approval certification.
2. Bring the content of the Circular Letter to the notice of the RS surveyors, interested organizations and persons in the area of the RS Branch Offices' activity.

Person in charge: A.S. Tumanov 314 +7 (812) 314-07-34

"Thesis" System: 17-277265

Appendix to Circular Letter
No. 314-54-1089c dated
29.12.2017

RULES
FOR TECHNICAL SUPERVISION DURING CONSTRUCTION OF SHIPS AND MANUFACTURE OF MATERIALS AND PRODUCTS FOR SHIPS,

ND 2-020101-040,

Part III TECHNICAL SUPERVISION DURING MANUFACTURE OF MATERIALS

4 WELDING. REGULATIONS FOR WELDERS' CERTIFICATION

4.1 GENERAL

shall be supplemented with new **paras 4.1.5** and **4.1.6** reading as follows:

"**4.1.5** The welding operators responsible for setting up and/or adjustment of fully mechanized and automatic equipment, such as submerged arc welding, gravity welding, electro-gas welding, MAG welding with auto-carriage, etc. must be qualified whether they operate the equipment or not. However welding operators, who solely operates the equipment without responsibility for setting up and/or adjustment, do not need qualification provided that they have experience in specific welding work concerned and the production welds made by the operators are of the required quality.

4.1.6 The training of welders, control of their qualification, professional improvement and maintenance of their skills are the responsibility of shipyards and manufacturers.".

4.3 DEFINITIONS, TERMS AND SYMBOLS USED IN WELDERS' APPROVAL TESTING

Paras 4.3.2.1 and **4.3.2.2** shall be amended to read:

"**4.3.2.1** Welders shall be qualified according to the below requirements separately for each of the following welding procedures:

M - manual welding in which welding wire is fed and welding torch is moved along and across weld by the welder (manually)

S - partly mechanized (semi-automatic) welding in which welding wire is fed mechanically and welding torch is moved along and across weld by the welder

A - fully mechanized (automatic) welding in which welding wire is fed and welding torch is moved mechanically without direct involvement of the welder

T (TIG welding) – tungsten inert gas welding

When required by the contract, the certification and approval testing of automatic or robotic welding operators shall be carried out in compliance with the requirements similar to those specified in ISO 14732.

4.3.2.2 Welders shall be qualified separately for each welding process according to Table 4.3.2.2.

Table 4.3.2.2

Welding Processes for Welder Qualification

Symbol	Welding process in actual welding works		Code acc. to ISO 4063
M	Manual welding	Manual metal arc welding with covered electrode (SMAW or MMAW)	111
		Oxy-acetylene welding	311
S	Partly mechanized welding	Metal inert gas welding (MIG)	131
		Metal active gas welding (MAG)	135, 138 [1)]
		Flux-cored wire metal arc welding with active gas shield (FCAW)	136 [2)]
		Flux cored inert gas arc welding	133
		Flux cored self-shielded arc welding	114
A	Fully mechanized welding	Submerged arc welding (SAW) with solid wire electrode	121
		Submerged arc welding (SAW) with flux cored electrode	125
		Plasma arc welding	15
		Electroslag welding	72
		Electrogas arc welding	73
T	Tungsten inert gas welding	Tungsten inert gas (TIG) arc welding with solid filler material (wire/rod)	141

[1)] A change from MAG welding with solid wires (135) to that with metal cored wires (138), or vice versa is permitted.
[2)] A change from a solid or metal cored wire (135/138) to a flux cored wire (136) or vice versa requires a new welder qualification test.

"

Para 4.3.3.2 shall be amended to read:

"**4.3.3.2** The following welded joint types are classified as follows for welder's qualification:

.1 butt welds:

A — single-sided weld with backing

B — single-sided weld without backing

C — double-sided weld with gouging

D — double-sided weld without gouging;

.2 F – fillet welds:

sl – single-layer weld;

ml – multi-layer weld.

For fillet welding, welders who passed the qualification tests for multi-layer technique welding can be deemed as qualified for single layer technique, but not vice versa.";

4.3.5 shall be deleted.

4.4 PROCEDURE FOR APPROVAL TESTING OF WELDERS

Para 4.4.2.1 shall be amended to read:

"**4.4.2.1** Materials for test pieces and welding consumables shall meet the requirements of Part XIII "Materials" and Part XIV "Welding", the Rules for the Classification and Construction of Sea-Going Ships.

Welders shall be practically tested by welding test pieces as specified in Appendix 1.

The test pieces shall be welded in presence of at least three members of the certification panel:

one certified welding engineer;

one representative of the technical control service having the qualification level permitting him to make conclusions on the control results through visual testing;

one Register representative.";

Para 4.4.2.3 shall be amended to read:

"**4.4.2.3** In the performance of practical qualification tests for welders' approval testing, the welding shall be performed on the basis of the Welding procedure specification (of a manufacturer) of an established pattern which is completed in accordance with the actual conditions of welding under production conditions. The following requirements shall be fulfilled:

test pieces shall be welded using the welding procedures applied in manufacture;

filler material shall be consistent with the peculiarities of the welding process and position;

structural elements of edge preparation for the test pieces (groove angle, root face, root gap) shall be representative for those used in manufacture;

test piece dimensions shall be stated in the Specification and comply with the requirements of Appendix 1;

welding equipment shall be of the same type as that used in manufacture;

test piece welding shall be performed in the positions and angles of pipe branch connections normally used in manufacture;

welding conditions and the welding sequence in the groove shall correspond to those used in manufacture;

combination of base metal, filler and auxiliary materials shall correspond to the conditions used in manufacture;

welding time for the test piece shall correspond to the standards applied in manufacture;

test pieces shall have at least one stop and one re-start in the root run and in the top capping run and shall be identified in the inspection length to be examined; this requirement is mandatory for manual and semiautomatic welding;

where the preheat, controlled heat input are required or the requirement for the minimum/maximum interpass temperature is regulated for particular welded joints (combinations of base metal and welding consumables) in manufacture practice, these parameters of the technological process shall be met while welding the welded joint test pieces for the welders' approval test;

where the post-weld heat treatment is required for particular welded joints in manufacture practice, this operation becomes mandatory for the welded joint test assemblies only in case when the test program provides for the bend test of test specimens. For other cases, the post-weld heat treatment of welded joint test pieces may be omitted if agreed with the Register;

test pieces shall be unambiguously identified;

it is allowed to remove minor surface imperfections of internal layer beads of the weld by grinding or any other method used in manufacture, only during stops before restart of welding."

Para 4.4.3.3 shall be amended to read:

"**4.4.3.3** The T-joint test piece P_2 for plates is additional and is used in the cases specified in 4.5.4.2 for the approval testing of welders for the performance of single-run fillet welds without beveling. The welders who have passed the tests on certification on P_1 and/or P_2 test pieces, can be engaged in tack welding within the range of approval specified in his Welder Approval Test Certificate. The tests on certification on test pieces P_{1tack} and/or P_{2tack} for assemblers/welders engaged in tack welding only may be required, provided the requirements for the range of approval for essential variables are met.";

Paras 4.4.4.1, 4.4.4.2 and **4.4.4.3** shall be amended to read:

"**4.4.4.1** After welding each test piece completed shall be tested according to Table 4.4.4.1 in the as-welded condition. The welds shall be visually examined prior to the cutting of the test specimen for the bend test and fracture test. Specimens shall be tested in the presence of the Register surveyor.

When permanent backing was used in the qualification test, it shall be removed prior to destructive testing.

The test specimen for macro examination shall be prepared and etched on one side to clearly reveal the weld. Polishing is not required.

In accordance with the indications in Note 3 to Table 4.4.4.1 for slagless welding processes, the testing shall be supplemented by either two additional bend tests (one face and one root or two side bends) or two fracture tests (one face and one root).

4.4.4.2 Test pieces P_1 of butt plate joints. The continuity of weld metal of butt plate joint test pieces shall be checked by radiographic testing or, if agreed with the Register, for thickness of 8 mm and more ultrasonic testing is allowed.

As alternative to non-destructive testing, fracture or static bend tests may be used to check the continuity of weld metal.

When fracture test is used, the welded joint test piece examination length shall be cut into the test specimens of equal width within the examination length discarding the plate ends according to Fig. 4.4.4.2-1, *a*. In so doing, the entire test piece examination length shall be tested by the bending failure of specimens dimensioned according to Fig. 4.4.4.2-1, *c* in such a way that the fracture length is not interrupted.

In the case of single-side welding without the remaining backing, half of the examination length of the test piece shall be tested on test specimens loaded on the face side and the other half on the root side according to Fig. 4.4.4.2-2.

If the continuity of weld metal is checked by bend test, the diagram of cutting-out and the number of test specimens depend on the test type (transverse bend test or side bend test).

For initial qualification, the test shall be applied to two weld face bending test specimens and two weld root bending test specimens. For the certificate prolongation, the test shall be applied to one weld face bending test specimen and one weld root bending test specimen. For thicknesses of 12 mm and more, four side bending test specimens (or two specimens for the certificate prolongation) of 10 mm thick may be used.

When only side bend tests are used, a minimum of four test specimens shall be taken equally spaced along the examination length. At least one of these side bend test specimens shall be taken from the start and stop area in the examination length. The size of the specimens and the diagram of bend tests shall comply with requirements of 2.2.5.1, Part XIII "Materials" of the Rules for the Classification and Construction of Sea-Going Ships and Fig. 4.4.4.2-3.

4.4.4.3 Test pieces P_2 of plate T-joints. The continuity of weld metal of plate T-joint test pieces shall be checked by test specimen fracture test according to Fig. 4.4.4.3. For test performance, the test piece shall be cut out into several test specimens within the specified inspection length discarding the plate ends 25 mm wide from each edge according to Fig. 4.4.4.3, *a*, and each specimen shall be tested in accordance with the diagram shown in Fig. 4.4.4.3, *b* and examined after destruction. In order to destroy the specimen along the centre of the weld (which is especially important for such viscose materials as aluminum and copper), longitudinal notches of square or sharp angle cross-section may be made along the weld (refer to Fig. 4.4.4.3, *c*). In such a case, the thickness of the fillet weld on the test piece shall be at least 80% of the initial value. In some cases preliminary cooling of the specimen is allowed to cause the metal fragile condition.

The weld fracture test may be replaced by the testing of the weld quality using magnetic particle or dye penetrant testing in combination with the macro examination. In this case at least two macrosections shall cut out (to be cut out of different sections). One macrosection shall be taken from the start and stop area in the examination length.";

Table 4.4.4.1 shall be amended to read:

"Table 4.4.4.1

Methods of testing of welded joint test pieces in welders' practical tests

Testing methods		Type of welded joint test piece											
		P_1		P_{1tack}	P_3		P_2 and P_4	P_{2tack}	P_5 and P_6		P_7	P_8	
		$3 \leq t < 12$	$t \geq 12$		$3 \leq t < 12$	$t \geq 12$			$3 \leq t < 12$	$t \geq 12$		C_1 and C_2	C_3 and C_4
Visual examination		+	+	+	+	+	+	+	+	+	+	+	+
Radiographic test		+[1,2]	+[1,2]	—	+[1,2]	+[1,2]	—	—	+[1,2]	+[1,2]	—	+	—
Ultrasonic test		+[2]	+[2]	—	+[2]	+[2]	—	—	+[2]	+[2]	+	+	—
Bend test	Weld root and top	+[1,3]	—	—	+[3,4]	—	—	—	+[1,3,4]	—	—	—	—
	Side bend	—	+[1,3]	—	—	+[1,3,4]	—	—	—	+[1,3,4]	—	—	—
Fracture test		+[1,3]	+[1,3]	+[5]	+[1,3,4]	+[1,3,5]	+[6]	+[5]	+[1,3,4]	+[1,3,4]	—	—	—
Macro examination		—	—	—	—	—	+[6]	—	+ 1 pc	+ 1 pc	+3 pcs	+ 3 pcs	—
Magnetic particle or dye penetrant testing		—	—	—	—	—	+[6]	—	—	—	+	+	—

[1]Either radiographic testing or bend or fracture tests shall be used
[2]For thickness of 8 mm and more, the radiographic testing may be replaced by an ultrasonic testing except for austenitic and austenitic ferritic steels (groups 8 and 10, respectively) and for aluminum and copper alloys.
[3]When radiographic or ultrasonic testing (rather than bend or fracture tests) is used, then additional bend or fracture tests are mandatory for slagless welding processes 131, 135, 136, 133 (both of them only for metal cored wires - M), 141 and 311.

[4]For outside pipe diameter of butt joints D ≤ 25 mm, the bend or fracture tests may be replaced by a notched tensile test of the complete test piece (refer to Fig. 4.4.4.4-2).

[5]Additional tests may be required at the discretion of the Register.

[6]Instead of the fracture test of a weld, it is allowed to examine the welding quality using magnetic particle/dye penetrant testing in combination with at least two macro examinations.

Para 4.4.5.1.2 shall be amended to read:

"**4.4.5.1.2** Before testing the welded joints by the visual testing the following shall be checked:

complete removal of the spatter metal from the tested surface;

no grinding on the face side and the root side of the weld;

identification mark of stop and re-start in the root run and in the top capping run;

availability of mandatory and additional marking on the test piece in accordance with 4.4.2.2.

Unless otherwise is agreed with the Register, the assessment of the welded joints quality by the visual testing results shall be carried out up to quality level B according to the base metal of the international standards:

ISO 5817 for joints in steel, nickel, titanium and their alloys (refer to Table 3.4.2.1, Part XIV "Welding" of the Rules for the Classification and Construction of Sea-Going Ships);

ISO 10042 for joints in aluminum and copper alloys (refer to Table 3.5.2.1, Part XIV "Welding" of the Rules for the Classification and Construction of Sea-Going Ships).

Here, criteria may be relaxed down to quality level C for the following types of external defects: excess weld metall, excessive root penetration, excessive weld convexity, and excessive effective throat thickness.".

Paras 4.4.5.5.1 and 4.4.5.5.2 shall be amended to read:

"**4.4.5.5.1** After the performance of butt welded joint fracture tests, the fracture surface shall be visually tested. The weld defects visible are subject to estimation to quality level B according to ISO 5817.

4.4.5.5.2 Quality of welded T-joints shall be checked for presence of cracks, porosity and pores, extraneous inclusions, lacks of fusion and incomplete penetration. The weld defects visible are subject to estimation to quality level B according to ISO 5817. ";

Para 4.4.6.1 shall be amended to read:

"**4.4.6.1** In cases when the certification panel has reliably established that the unsatisfactory result of initial practical tests is due to the causes not associated with the welder's skill (e.g. welding equipment faults, defects of welding electrode covering, etc.), the welder shall be approved for retests on the same number of test pieces. In this case, the quality of base metal and welding consumables, as well as the serviceability of welding equipment shall be properly checked by the certification panel members. If the specimen does not meet the size requirements due to improper machining, a new specimen shall be prepared, welded and tested in accordance with the established procedure.".

4.5 RANGE OF APPROVAL BASED ON TEST RESULTS

Para 4.5.2 shall be amended to read:

"**4.5.2** Every practical test is generally limited by the range of approval for one welding process/type designated by indices according to the requirements of 4.3.2.1 and 4.3.2.2. The change of a welding process/type in the product manufacture calls for performance of new tests on welders' approval.

If a specific joint is welded in production by one welder using the combination of two or more welding processes, the practical approval tests may be performed as follows:

.1 a test piece is welded in testing using the combination of two or more welding processes in a similar way as in production (e.g. the root – single-side tungsten inert gas welding without backing, groove filling – manual welding with covered electrodes);

.2 in the approval testing, two test pieces are welded for the separate welder's certification for each welding process.

The range of approval of the Welder Approval Test Certificate for base metal thicknesses for combination of two welding processes/types is given in Table 4.5.2 (refer also to Table 4.5.7.1).

It shall be considered that the use of any variants of testing for combination of two or more welding processes/types shall not result in reduction of requirements to the extent of examination of the welded joint test pieces specified by the requirements of Table 4.4.4.1 for bend tests.

N o t e. It is allowed to carry out the welding and testing of test pieces using the combination of two or more of welding processes by one or different welders according to the options other than those specified in 4.5.2.1 and 4.5.2.2.";

Table 4.5.2 shall be amended to read:

"Table 4.5.2

Thickness range for single and multi process joints for butt welds

Welding process used for the test piece	Thickness range	
	Single process joint	Single process joint
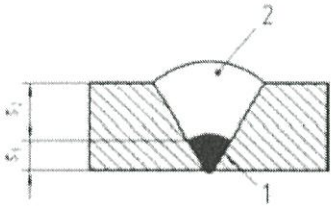 1 – welding process 1 (B) 2 – welding process 2 (A)	According to Table 4.5.7-1 For welding process 1: $t = s_1$ For welding process 2: $t = s_2$	According to Table 4.5.7-1 $t = s_1 + s_2$
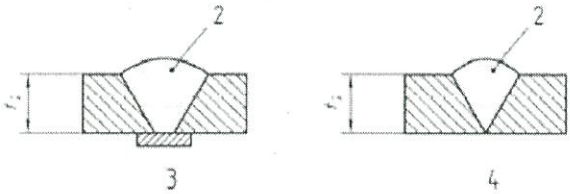 2 – welding process 2 3 – welding with backing (A) 4 – welding without backing (B)	According to Table 4.5.7-1 For welding process 1: $t = t_1$ For welding process 2: $t = t_2$	According to Table 4.5.7-1 $t = t_1 + t_2$ Welding process 1: only for welding of the root area
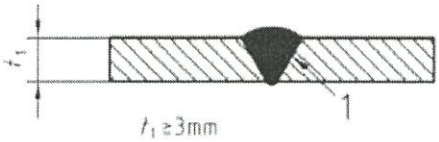 1 – welding process 1		

Table 4.5.5-1 shall be amended to read:

"Table 4.5.5-1

Range of approval of the Welder Test Approval Certificate for base metal (steel)

Base metal group[1] of test piece		Range of approval based on test results												
		1.1; 1.2; 1.4	1.3	2	3	4	5	6	7	8	9		10	11
											9.1	9.2+9.3		
1.1; 1.2; 1.4		×	—	—	—	—	—	—	—	—	—	—	—	—
1.3		×	×	×	×	—	—	—	—	—	×	—	—	×
2		×	×	×	×	—	—	—	—	—	×	—	—	×
3		×	×	×	×	—	—	—	—	—	×	—	—	×
4		×	×	×	×	×	×	×	×	—	×	—	—	×
5		×	×	×	×	×	×	×	×	—	×	—	—	×
6		×	×	×	×	×	×	×	×	—	×	—	—	×
7		×	×	×	×	×	×	×	×	—	×	—	—	×
8		—	—	—	—	—	—	—	—	×	—	×	×	—
9	9.1	×	×	×	×	—	—	—	—	—	×	—	—	×
	9.2+9.3	×	—	—	—	—	—	—	—	—	—	×	—	—
10		—	—	—	—	—	—	—	—	×	—	×	×	—
11		×	×	—	—	—	—	—	—	—	—	—	—	×

[1] Base metal group according to ISO/TR 15608.
Symbols:
"×" indicates those base metals groups for which the welder is qualified.
"–" indicates those base metals groups for which the welder is not qualified.

Table 4.5.6 shall be amended to read:

"Table 4.5.6

Range of approval of the Welder Test Approval Certificate for welding consumables[1]

<table>
<tr><td rowspan="2">Welding process</td><td rowspan="2" colspan="2">Welding consumables used in the test[2]</td><td colspan="4">Range of approval based on test results</td></tr>
<tr><td colspan="2">A, RA, RB, RC, RR, R</td><td>B</td><td>C</td></tr>
<tr><td rowspan="3">111</td><td colspan="2">A, RA, RB, RC, RR, R</td><td colspan="2">×</td><td>—</td><td>—</td></tr>
<tr><td colspan="2">B</td><td colspan="2">×</td><td>×</td><td>—</td></tr>
<tr><td colspan="2">C</td><td colspan="2">—</td><td>—</td><td>×</td></tr>
<tr><td rowspan="2">—</td><td rowspan="2" colspan="2">—</td><td rowspan="2">Solid wire (S)</td><td colspan="3">Type of electrode core</td></tr>
<tr><td>(M)</td><td>(B)</td><td>(R, P, V, W, Y, Z)</td></tr>
<tr><td rowspan="2">131
135
136
141</td><td colspan="2">Solid wire (S)</td><td>×</td><td>×</td><td>—</td><td>—</td></tr>
<tr><td rowspan="3">Type of electrode core</td><td>(M)</td><td>×</td><td>×</td><td>—</td><td>—</td></tr>
<tr><td>136</td><td>(B)</td><td>—</td><td>—</td><td>×</td><td>×</td></tr>
<tr><td>114
136</td><td>(R, P, V, W, Y, Z)</td><td>—</td><td>—</td><td>—</td><td>×</td></tr>
<tr><td colspan="7">[1] Abbreviations of welding consumables comply with 4.3.2.3.
[2] The type of welding consumables used in the qualification test of welders for root welding without backing (B) is the type of welding consumables qualified for root run welding in production.
Symbols:
"×" indicates those welding consumables (electrode covering, electrode core) for which the welder is qualified.
"–" indicates those welding consumables (electrode covering, electrode core) for which the welder is not qualified.</td></tr>
</table>

Para 4.5.7 shall be amended to read:

"4.5.7 The range of approval of the Welder Approval Test Certificate shall be specified on the basis on the following welded joint dimensions:

thickness of the base metal and weld;

outside pipe diameter.

Fillet weld thickness shall be: $0.5t \leq a \leq 0.7t$ for $t \geq 6$ mm; $0.5t \leq a \leq t$ for $t < 6$ mm.

Each practical qualification test shall be conducted within the range of range of approval of the Welder Approval Test Certificate in accordance with the requirements of Tables 4.5.7-1, 4.5.7-2 and 4.5.7-3.

In case of branch welding, criteria of Tables 4.5.7-1 and 4.5.7-2 apply, together with the following rules:

for set-on branch connection, the material thickness and outside pipe diameter are those of the branch;

for set-in or set-through branch connection, the material thickness is that of the main pipe or shell and the outside pipe diameter is that of the branch.

For welded joint test pieces of different outside pipe diameters and base metal thicknesses, the range of approval of the Welder Approval Test Certificate is determined separately for:

the thinnest and thickest material thickness qualified in accordance with Table 4.5.7-1;

the smallest and largest outside pipe diameter qualified in accordance with Table 4.5.7-2.";

Table 4.5.7 – 1 shall be amended to read:

"Table 4.5.7-1

Range of approval of the Welder Approval Test Certificate for base metal and weld metal thickness of butt welds

Base metal[1]	Thickness of test piece metal in tests t, in mm	Range of approval of base metal and weld metal thickness, in mm
Steels	$t < 3$ $3 \leq t < 12$ $t \geq 12$	from t to $2t$[2] over 3 to $2t$[3] over 3
Aluminum and its alloys	$t \leq 6$ $6 < t \leq 15$	from $0.7t$ to $2.5t$ $6 < t \leq 40$[4]
Copper and its alloys	t	from $0.5t$ to $1.5t$[5]

[1]For multi processes, S_1 and S_2 apply according to the instructions in Table 4.5.2.
[2]For gas (oxy-acetylene) welding – from t to $1.5t$.
[3]For gas (oxy-acetylene) welding – from 3 mm to $1.5t$.
[4]For base metal having thickness more than 40 mm, separate certification is required which shall be indicated in Welder Approval Test Certificate and in the test report.
[5]For gas (oxy-acetylene) welding, the welder shall be qualified for the thinnest and thickest base metal thickness, for which he is qualified in practice

Table 4.5.7-3 shall be amended to read:

"Table 4.5.7- 3

Range of approval of the Welder Approval Test Certificate for base metal thickness of test piece for fillet welds

Base metal thickness of test piece t, in mm	Range of approval by base metal thickness, in mm
$t < 3$	From t to 3
$t \geq 3$	From 3 and more
Note: The thickness of the fillet weld shall be within the range: $0.5t \leq a \leq 0.7t$ for $t \geq 6$ mm; $0.5t \leq a \leq t$ for $t < 6$ mm.	

Table 4.5.8 shall be amended to read:

"Table 4.5.8

Range of approval of the Welder Approval Test Certificate for welding positions

Welding positions in tests	Range of approval based on test results[1]										
	PA	PB	PC	PD	PE	PF (plate)	PF (pipe)	PG (plate)	PG (pipe)	H-L045	J-L045
PA	×	×	—	—	—	—	—	—	—	—	—
PB[2]	×	×	—	—	—	—	—	—	—	—	—
PC	×	×	×	—	—	—	—	—	—	—	—
PD[2]	×	×	×	×	×	—	—	—	—	—	—
PE	×	×	×	×	×	—	—	—	—	—	—
PF (plate)	×	×	—	—	—	×	—	—	—	—	—
PE+PF (plate)	×	×	×	×	×	×	—	—	—	—	—
PF (pipe)	×	×	—	×	×	×	×	—	—	—	—
PG (plate)	—	—	—	—	—	—	—	×	—	—	—
PG (pipe)	×	×	—	×	×	—	—	×	×	—	—
H-L045	×	×	×	×	×	×	×	—	—	×	—
J-L045	×	×	×	×	×	—	—	×	×	—	×

[1] Additionally the requirements of 4.5.3 and 4.5.4 shall be met.
[2] Welding positions PB and PD are only used for fillet welds an can only qualify fillets welds in other welding positions.
Symbols:
"×" indicates those welding positions for which the welder is qualified.
"–" indicates those welding positions for which the welder is not qualified.

Para 4.5.9 and **Tables 4.5.9-1, 4.5.9-2** shall be amended to read:

"**4.5.9** The ranges of approval of the Welder Approval Test Certificate depending on the welding technique are given in Table 4.5.9 with additional reference to 4.3.3.2. When welding with gas (oxy-acetylene) a change from rightward welding to leftward welding and vice versa requires a new qualification test.

Table 4.5.9

Range of approval of the Welder Approval Test Certificate for types of welds

Qualification weld details				Range of approval
Butt weld	Single-side weld	With backing	A	A, C, F
		Without backing	B	A, B, C, D, F
	Double-side weld	With gouging	C	A, C, F
		Without gouging	D	A, C, D, F
Fillet weld	—	—	F	F

"

4.6 DRAWING-UP, VALIDITY AND PROLONGATION OF WELDER APPROVAL TEST CERTIFICATE

Para 4.6.3 shall be amended to read:

"**4.6.3** The record of welder's certification is executed in two copies. One copy is kept in the certification centre and the other is forwarded to the RS Branch Office carrying out technical supervision of tests performance.

The report documents of welder's certification (records, certificate copies, conclusions on the results of quality control for welded joint test pieces, etc.) shall be kept in the relevant file of the RS Branch Office in a paper or electronic form (as a scanned copy).";

Para 4.6.6 shall be amended to read:

"**4.6.6** The Welder Approval Test Certificate issued is valid for a period of two years provided that it is confirmed every six months by the responsible personnel of the employer. Confirmation of validity upon each qualification shall be reported to the Register on demand. The confirmation entry introduced in the appropriate columns of the Welder Approval Test Certificate is the acknowledgment by the employer of the fact that the following requirements were complied with in the process of the welder performance of his professional duties within the period of account:

the welder shall be continuously engaged on welding work within the current period of approval. In this case, an interruption in work over six months is not permitted;

the welder's work in production shall correspond in its complexity to the range of approval specified in the Welder Approval Test Certificate;

the welder's skill and knowledge shall not be questioned during working.

If any of these conditions are not fulfilled, the Welder Approval Test Certificate becomes invalid. In this case, the matter of its renewal or issuance of the new one is handled individually in each particular case.

Note. In accordance with the practice adopted in the national legislation, the welder shall pass regular medical examination and get positive conclusion of a medical commission on professional fitness. ";

Para 4.6.9 shall be amended to read:

"**4.6.9** Each shipyard and/or manufacturer is responsible for monitoring validity of certificates and qualification area. The shipyard and/or manufacturer shall assign a person in charge (executive) for this function.

A card index for every certified welder shall include:

copy of an education document;

copy of a special training document;

reference on continuous welding experience;

records of passing the examinations specifying the members of the certification panel, additional questions, marks received, examination dates, practical examination results;

conclusion of the panel on examination results;

copies of the test reports for welded joints made by the welder during an accountable period with the conclusion of a manufacturer-employers responsible official on a possibility to prolong the Certificate for the next six months.

Any of the above documents shall be shown to the RS surveyor, if required.".

Appendix 1 (Mandatory)

Fig. 1 "Test piece of P_1 plate butt joint" shall be supplemented with the following Figures:

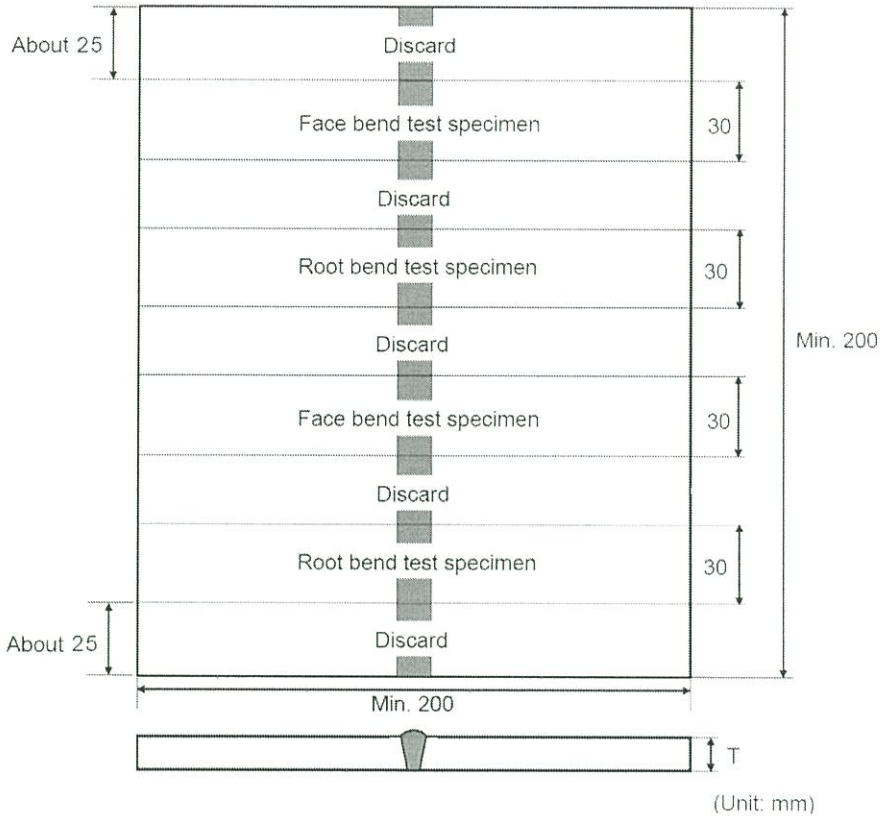

Fig.1.1

Dimensions and types of test piece for butt welds (T < 12 mm)

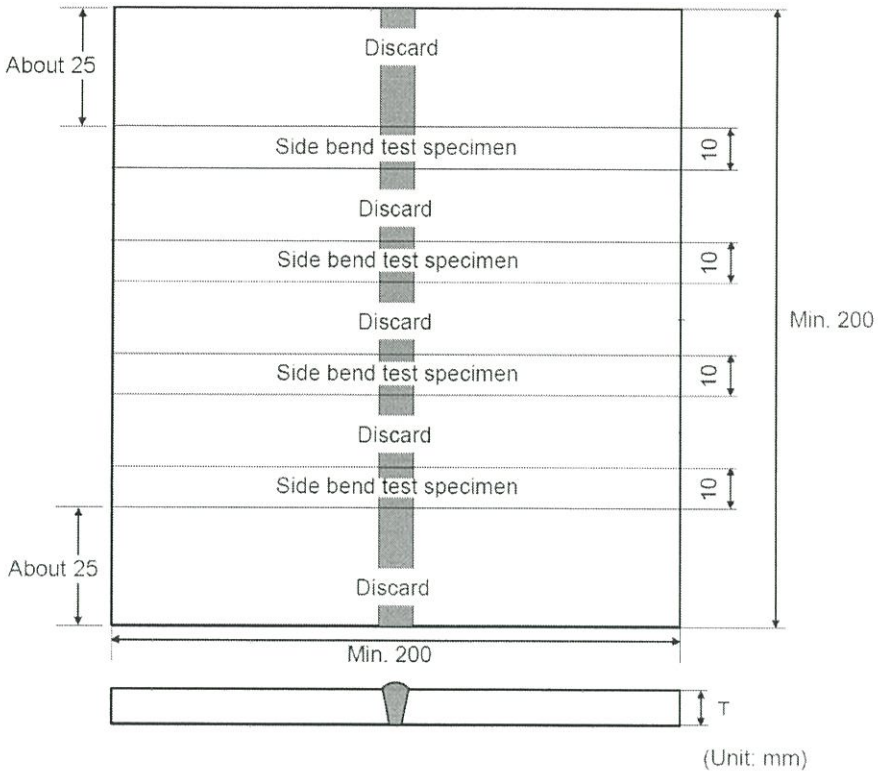

Fig.1.2

Dimensions and types of test piece for butt welds (T ≥ 12 mm)

Fig. 2 "Test piece of P_2 plate T-joint" shall be amended to read:

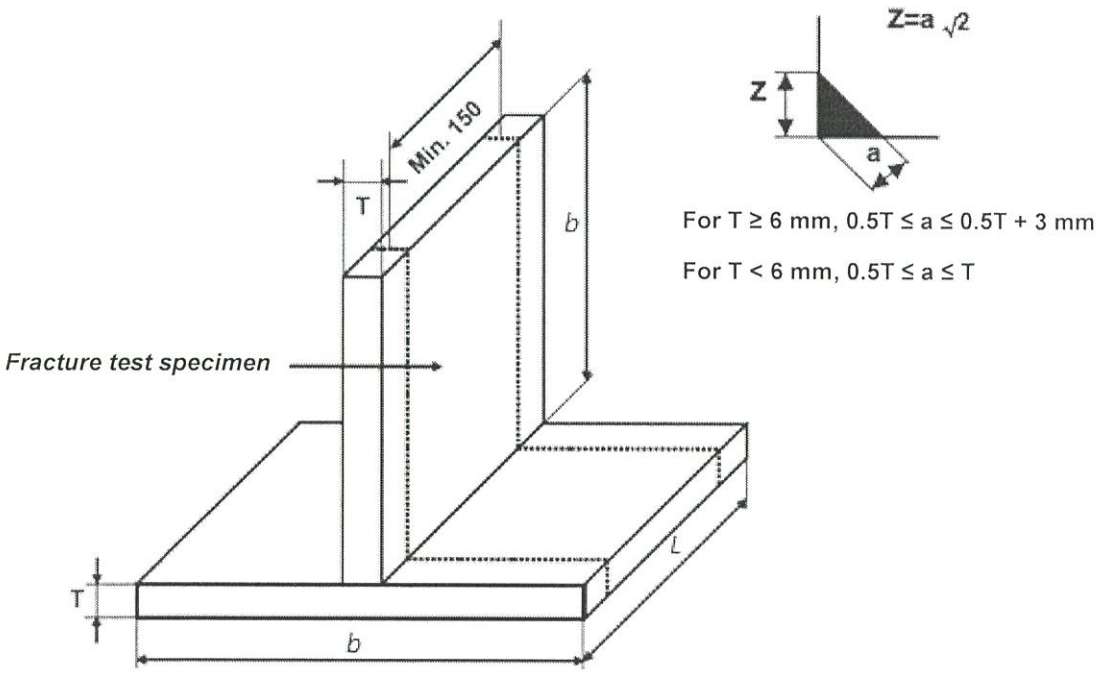

Welding process	Test piece dimensions, in mm	
	L	*b*
MW, SA,	≥200	≥100(150)[1]

A	≥800	≥125(200)[1]
[1] Values *b* in brackets are for aluminium and aluminium alloys.		

Fig. 2

Test piece of P_2 plate T-joint

Fig. 10 "T-joint test piece P_{2tack} for tack fillet welds" shall be amended to read:

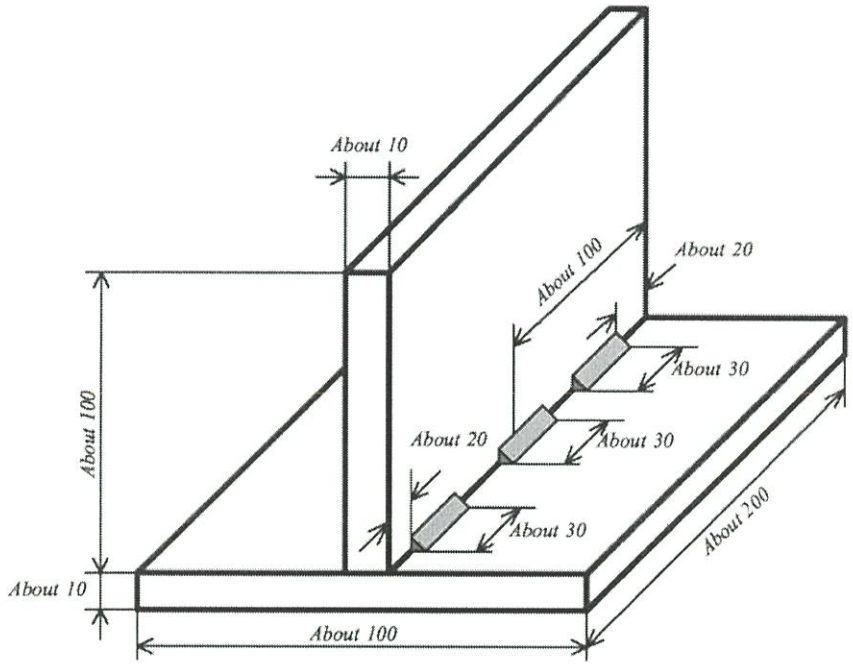

Fig.10

T-joint test piece P_{2tack} for tack fillet welds

Appendix 2 *(Reference)* shall be amended to read:

"*APPENDIX 2 (Reference)*

WELDING POSITIONS

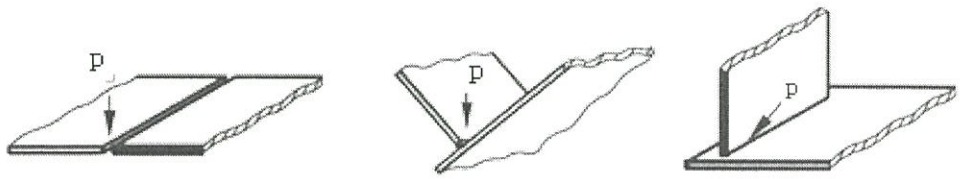

a) PA: flat position

b) PB: horizontal vertical position

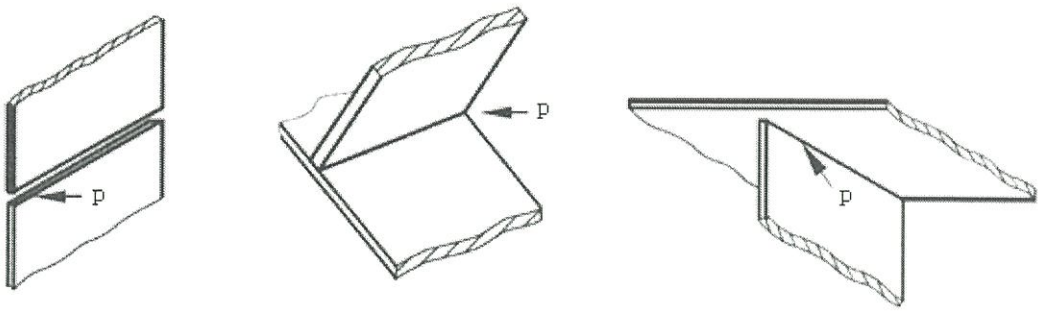

c) PC: horizontal position

d) PD: horizontal overhead position

e) PE: overhead position

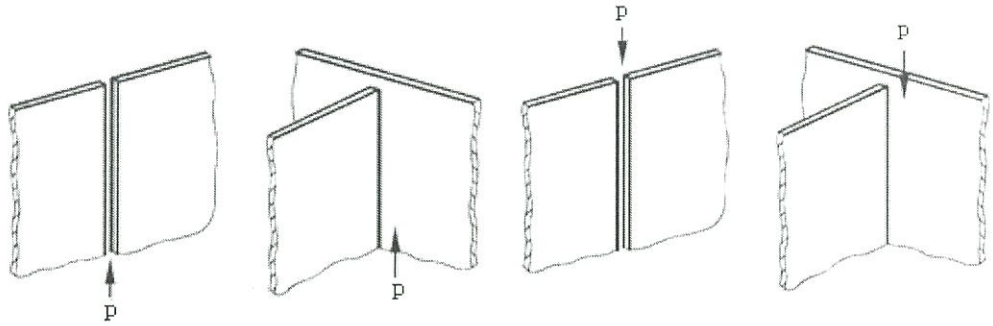

f) PF: vertical up position

g) PG: vertical down position

Note. p is the welding position.

Fig. 1
Welding positions for plates"

Appendix 4 shall be amended to read:

"*APPENDIX 4 (MANDATORY)*

PRACTICAL RECOMMENDATIONS FOR COMPLETING FORM 7.1.30 "WELDER APPROVAL TEST CERTIFICATE"

1. As a rule, a separate Welder Approval Test Certificate shall be drawn up for each particular version of essential variables. If more than one test piece was tested during the qualification test, then, the only one variation of the below listed essential variables is permitted for combining in one Certificate:

type of weld;

welding position;

dimensions of welded joint (material thickness and outside pipe diameter).

In this case the Welder Approval Test Certificate is drawn up for combination of the ranges of approval for each test piece.

2. For welding processes with gas shield, the test performing conditions and range of approval of the Welder Approval Test Certificate are set according to the following requirements:

for welding processes 135 and 136, the qualification tests are performed with one of the shielding gas compositions of C or M groups, which is mostly used in production process and cover all gases compositions of these two groups (C1, C2, M1, M2 and M3);

for welding processes 131, 133, 141 and 15, qualification tests are performed with one of

the shielding gas compositions of group I, which are mostly used in production process and cover all gases compositions of this group (I1, I2, I3).

Note. Shielding gases of R and F groups are normally not employed for shipbuilding materials, and, therefore, they are not used for testing qualification of welders.

3. For welding processes with the use of fluxes, the range of approval of the Welder Approval Test Certificate is not regulated. The designation (trademark) and manufacture method (indices F, A or M according to 4.3.2.5) of the flux used during the qualification tests are shown in the corresponding column of the Certificate and a dash (—) is inserted in the column for range of approval.

4. In column "Employer", the full name of the manufacturer is entered where the welder works and which applied for his certification.

5. In column "Code/Testing Standard", the rules of Russian Maritime Register of Shipping ("RS Rules") are noted.

6. The explanations and indications on completing the main Table "Range of test and approval" are detailed in the Table.

When filling out information about consumables used for weld test details in relevant columns (7, 8, 9) of the Welder Approval Test Certificate (form 7.1.30), it is recommended to put trade marks (designation) of the consumables used in brackets additionally For instance: wm/S (СВ-08Г2С-О), M21 (80%Ar+20%CO2), MS (АН-348А), B (УОНИИ-13/55), etc.

7. Table "Test results" of the Welder Approval Test Certificate is drawn as follows. Results of practical tests and examination of job knowledge shall be indicated by terms "Accepted" or "Not tested".

8. Table "Validity and prolongation for approval". The left half of the Table is completed by the employer's official in charge according to the requirements of 4.6.6 and 4.6.9.

The entry on prolongation of the Welder Approval Test Certificate validity period shall be made in the right half of the Table by the RS surveyor according to 4.6.8 and 4.6.10 and certified by his personal signature and stamp.

9. The "Location and date of issue" column specifies the name of the certification center wherein the welder's approval tests were carried out. The date of issue shall be defined by the date of record of the certification panel issued upon completion of all works on certification.

Table

Form 7.1.30 columns	Weld test details (to be entered)	Range of approval (to be entered)
1 Welding procedure specification	No. of appropriate WPS if drawn up for practical tests (otherwise, insert a dash (—))	Insert a dash (—)
2 Welding type	Coded process designation (refer to 4.3.2.2)	Coded process designation and its full name
3 Welding process	Coded welding type designation (refer to 4.3.2.1)	Coded welding type designation and its abbreviated alphabetical designation is indicated according to Table 6.2.2.1

4 Plate or pipe	Coded designation P or T (refer to 4.3.4.1)	Code designation of the product type according to 4.5.3 and reference "refer to welding positions"
5 Joint type	Full code designation of weld type of test piece, including details of welding process. Possible designation variants: A; B; C; D; F	Coded designation of the welded joint type and of welding details according to 4.5.4 and 4.5.9. Possible designation variants: A, C, F A, B, C, D, F A, C, F A, C, D, F F
6 Base metal group / designation	Designation of base metal subgroup (group) (refer to Tables 4.3.3.1-1, 4.3.3.1-2 and 4.3.3.1-3), and for shipbuilding materials, after "/" symbol, the category designation in compliance with Part XIII "Materials" of the Rules for the Classification and Construction of Sea-Going Ships. For other materials, brands may be additionally designated in accordance with the national standards.	Designations of base metal subgroups according to 4.5.5 (refer to Tables 4.5.5-1, 4.5.5-2 and 4.5.5-3).
7 Filler material type / designation	In numerator: coded designation for filler material: wm — welding with filler material; nm — welding without filler material. In denominator: filler material type: E — covered electrodes; S — solid wire; FCW — flux-cored wire; SR — solid rod; FR — flux-cored rods. For welding without filler material a dash (—) is inserted.	Range of approval of the Welder Approval Test Certificate for the presence and type of filler material taking into account the expanded range of approval in accordance with 4.5.6 for specific welding processes.

8 Shielding gas composition/flux	Group of shielding gas composition in use during tests for the range of qualification (refer to 4.3.2.4). For welding processes 121 and 125 flux designation (brand) and method of its manufacture are indicated (refer to 4.3.2.5).	According to the requirements 2 and 3 of the present Appendix
9 Type of flux or electrode covering	Coded designation of electrode covering or filler of the flux-cored wire used during the tests (refer to 4.3.2.3)	Range of approval of Welder Approval Test Certificate according to requirements of Table 4.5.6
10 Auxiliary materials	Data on auxiliary materials, namely: backing type and material, various pastes and fluxes for oxy-acetylene welding, composition of shielding gas for backing on the back of weld, etc.	Range of a approval of the Welder Approval Test Certificate by auxiliary materials of the same type as that used in testing, or in case of no auxiliary materials, a dash (—) is inserted.
11 Base metal thickness	Actual thickness of base metal of test pieces welded (refer also to Table 4.5.2 for combination of welding processes on one test piece)	Range of thicknesses of base metal the welder is approved for according to 4.5.7. For a combination of welding processes the range of thickness is indicated separately for each welding process and their combination. E.g.: 141: 3 mm $\leq t \leq$ 10 mm 135 : $t \geq$ 5 mm or 141/135: $t \geq$ 5 mm
12 Pipe outside diameter	Actual values of outside pipe diameters of test pieces welded.	Range of pipe diameters the welder is approved for according to 4.5.7.
13 Welding position (s) / type of test piece	In numerator: designations of test piece welding positions according to Appendix 2 separated by "/" symbol. In denominator: designation of test piece in accordance with Appendix 1.	Welding positions the welder is approved for according to 4.5.8 (for plates and pipes separately). For shortening the record, the entry: "All except... " is permitted.

".